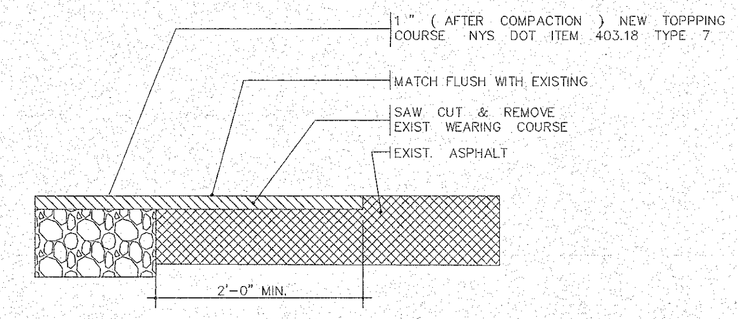

BITUMINOUS PAVEMENT TIE-IN

SCALE: N.T.S.

2 / C105

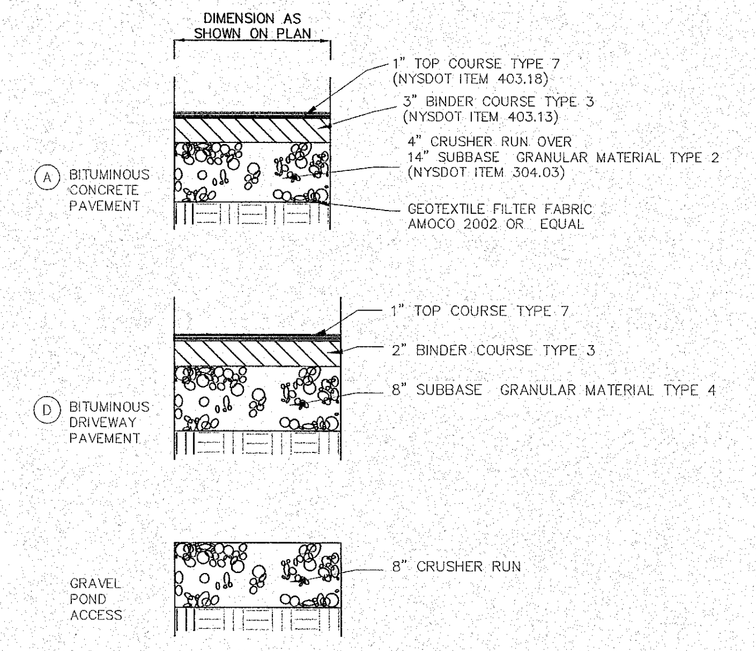

PAVEMENT DETAILS

SCALE: N.T.S.

5 / C105

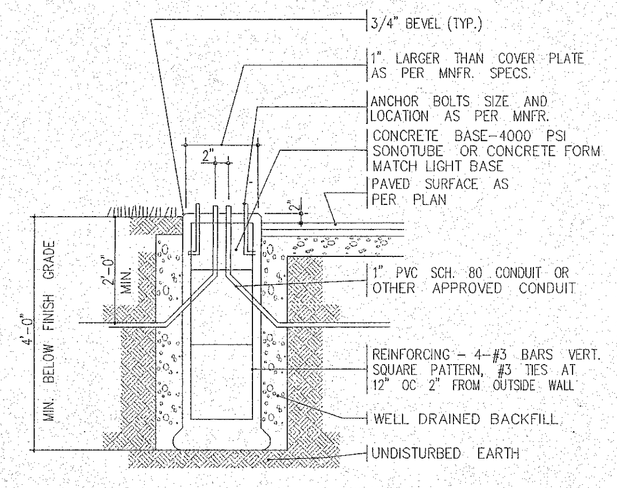

LIGHT POLE BASE DETAIL

SCALE: N.T.S.

4 / C105

RETAINER GLAND DETEAIL
HYDRANTS SHALL BE INSTALLED AS PER TOWN OF BETHLEHEMS STANDARD DETAILS SHEET C-112

SCALE: N.T.S.

3 / C105

HYDRANT DETAIL
HYDRANTS SHALL BE INSTALLED AS PER TOWN OF BETHLEHEMS STANDARD DETAILS SHEET C-112

SCALE: N.T.S.

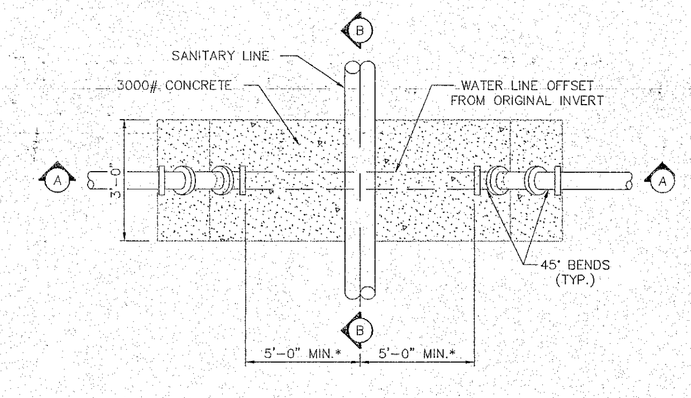

PLAN

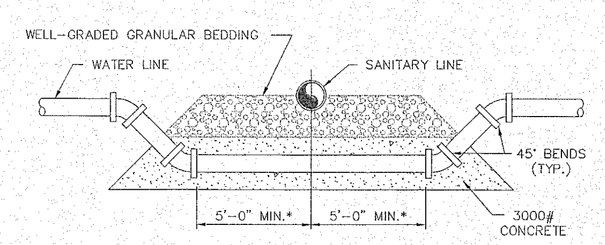

SECTION A-A

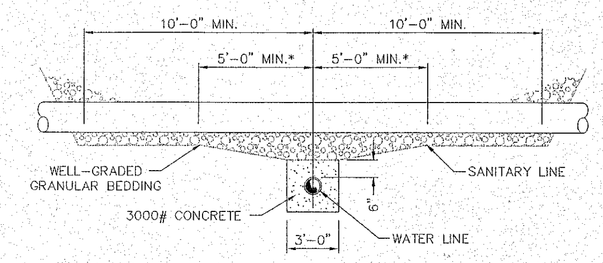

SECTION B-B

NOTE:
PRESSURE-TEST ALL JOINTS BEFORE ENCASING IN CONCRETE.

* SEE PLAN FOR DIMENSION

SANITARY/WATER LINES CROSSING DETAIL

SCALE: N.T.S.

8 / C105

THRUST BLOCK DETEAIL
HYDRANTS SHALL BE INSTALLED AS PER TOWN OF BETHLEHEMS STANDARD DETAILS SHEET C-112

SCALE: N.T.S.

6 / C105

CONCRETE SANITARY SEWER MANHOLE
MANHOLES FRAMES AND GRATES SHALL BE INSTALLED AS PER TOWN OF BETHLEHEMS STANDARD DETAILS SHEET C-110

SCALE: N.T.S.

7 / C105

INCHES
Town of Bethlehem, NY

PLANNING BOARD
TOWN OF BETHLEHEM
ALBANY COUNTY, NEW YORK

This plat APPROVED subject to such conditions as are stated in Building Project Approval (B/P/A)

No. BPA #26 Dated 3-7-06

Title Chairman

Date 7/12/04

TOWN OF BETHLEHEM APPROVAL

Angerame Architects, P. C.

Architecture
Planning
Interior Design

30 Essex St.
Albany
New York 12206
P 518 454 9300
F 518 454 9333
W angeramearchitects.com

Project

Beverwyck
A Joint Venture of Albany Guardian Society and The Daily, a Member of Northeast Health
Setting the Standard in Retirement Living

PHASE IV COTTAGES

Slingerlands , New York

Consultants

Civil:
Brett Steenburgh, P.E. P.L.L.C.
2832 Rosendale Road, Niskayuna , NY 12309
Phone: (518) 365-0675 Fax: (518) 831-9431

Landscape Architect:
Miller Associates
169 Haviland Road, Queensbury , NY 12804
Phone: (518) 792-4958 Fax: (518) 792-8511

Owner

Beechwood Inc.
2212 Burdett Avenue, Troy, NY 12180

Revisions

REVISED 02-16-05
REVISED 01-29-06
REVISED 02-22-06
REVISED 02-23-06
REVISED 03-01-06
REVISED 03-24-06
REVISED 04-26-06
REVISED 05-01-06

STATE OF NEW YORK · BRETT L. STEENBURGH · 075459 · LICENSED PROFESSIONAL ENGINEER

Title

SITE DETAILS

Do not scale drawings – use dimensions shown, verify all dimensions on site. Unauthorized alterations or additions to this document is a violation of Sec. 7209 Sub. 2 of the NYS Education Law. Copyright 2004 Angerame Architects, P. C. All rights reserved. No use or reproduction of this material is permitted without the express written consent of Angerame Architects, P. C.

Drawing Number

C-105

Date: AUGUST 5, 2004