LEGEND

SF — SF — PROPOSED SILT FENCE

HAY BALE CHECK DAM

DROP INLET PROTECTION

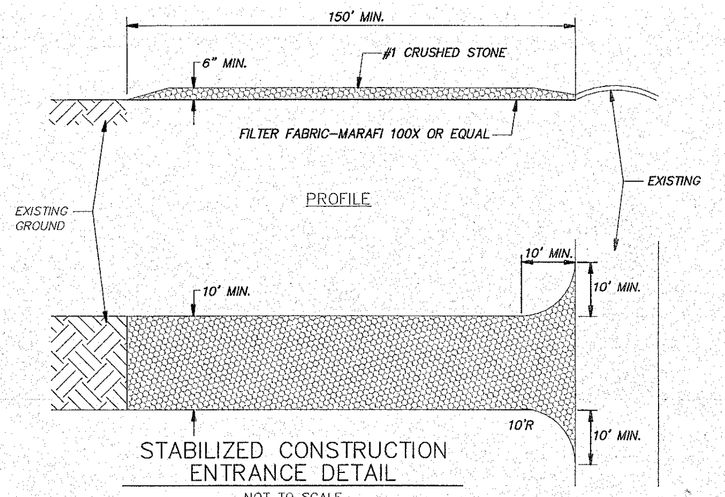

STABILIZED CONSTRUCTION ENTRANCE DETAIL

NOT TO SCALE

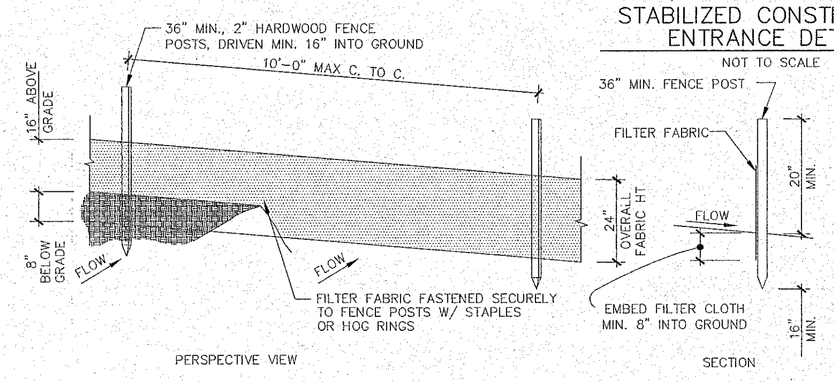

SILT FENCE DETAIL

1 / C108

SCALE: N.T.S.

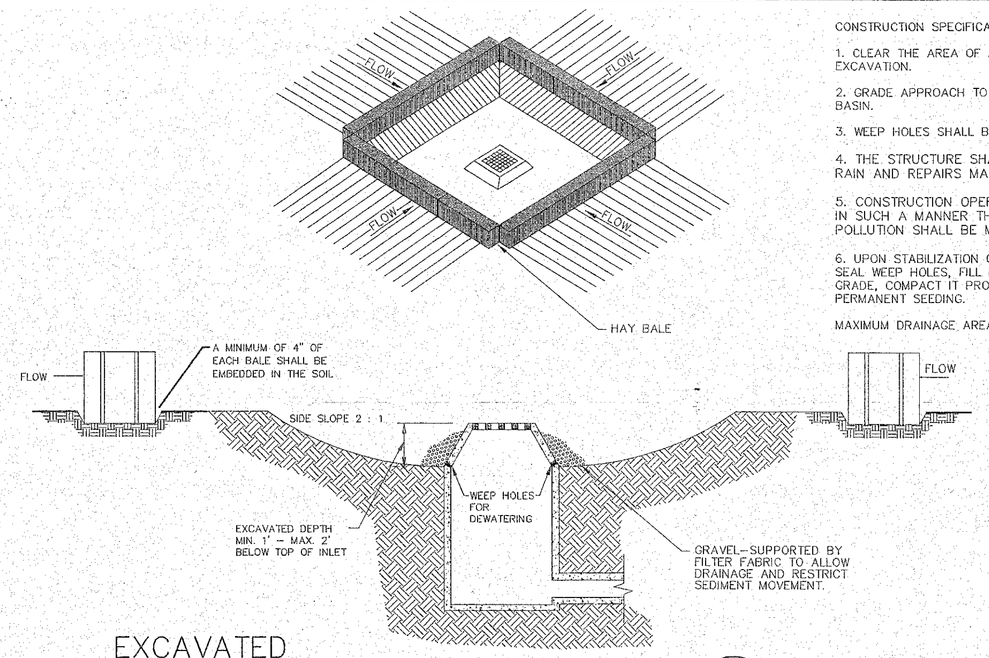

EXCAVATED DROP INLET PROTECTION DETAILS

2 / C108

SCALE: N.T.S.

CONSTRUCTION SPECIFICATIONS:

1. CLEAR THE AREA OF ALL DEBRIS THAT WILL HINDER EXCAVATION.

2. GRADE APPROACH TO THE INLET UNIFORMLY AROUND THE BASIN.

3. WEEP HOLES SHALL BE PROTECTED BY GRAVEL.

4. THE STRUCTURE SHALL BE INSPECTED AFTER EACH RAIN AND REPAIRS MADE AS NEEDED.

5. CONSTRUCTION OPERATIONS SHALL BE CARRIED OUT IN SUCH A MANNER THAT EROSION AND WATER POLLUTION SHALL BE MINIMIZED.

6. UPON STABILIZATION OF CONTRIBUTING DRAINAGE AREA, SEAL WEEP HOLES, FILL BASIN WITH STABLE SOIL TO FINAL GRADE, COMPACT IT PROPERLY AND STABILIZE WITH PERMANENT SEEDING.

MAXIMUM DRAINAGE AREA 1 ACRE

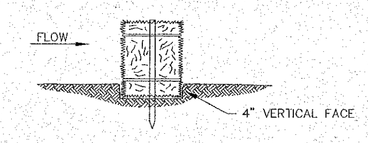

BEDDING DETAIL

DRAINAGE AREA NO MORE THAN 1/4 ACRE PER 100 FEET OF STRAW BALE DIKE FOR SLOPES LESS THAN 25%

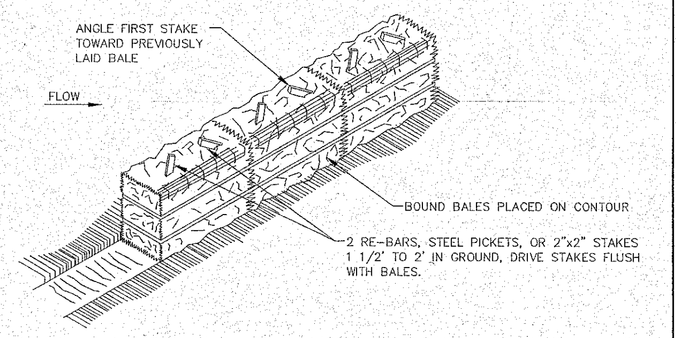

ANCHORING DETAIL

CONSTRUCTION SPECIFICATIONS

1. BALES SHALL BE PLACED AT THE TOE OF A SLOPE, OR ON THE CONTOUR AND IN A ROW WITH ENDS TIGHTLY ABUTTING THE ADJACENT BALES.

2. EACH BALE SHALL BE EMBEDDED IN THE SOIL A MINIMUM OF (4) INCHES, AND PLACED SO THE BINDINGS ARE HORIZONTAL.

3. BALES SHALL BE SECURELY ANCHORED IN PLACE BY EITHER TWO STAKES OR RE–BARS DRIVEN THROUGH THE BALE. THE FIRST STAKE IN EACH BALE SHALL BE DRIVEN TOWARD THE PREVIOUSLY LAID BALE AT AN ANGLE TO FORCE THE BALES TOGETHER. STAKES SHALL BE DRIVEN FLUSH WITH THE BALE.

4. INSPECTION SHALL BE FREQUENT AND REPAIR REPLACEMENT SHALL BE MADE PROMPTLY AS NEEDED.

5. BALES SHALL BE REMOVED WHEN THEY HAVE SERVED THEIR USEFULNESS SO AS NOT TO BLOCK OR IMPEDE STORM FLOW OR DRAINAGE.

= STRAW BALE DIKES

STRAW BALE DIKE DETAIL

3 / C108

SCALE: N.T.S.

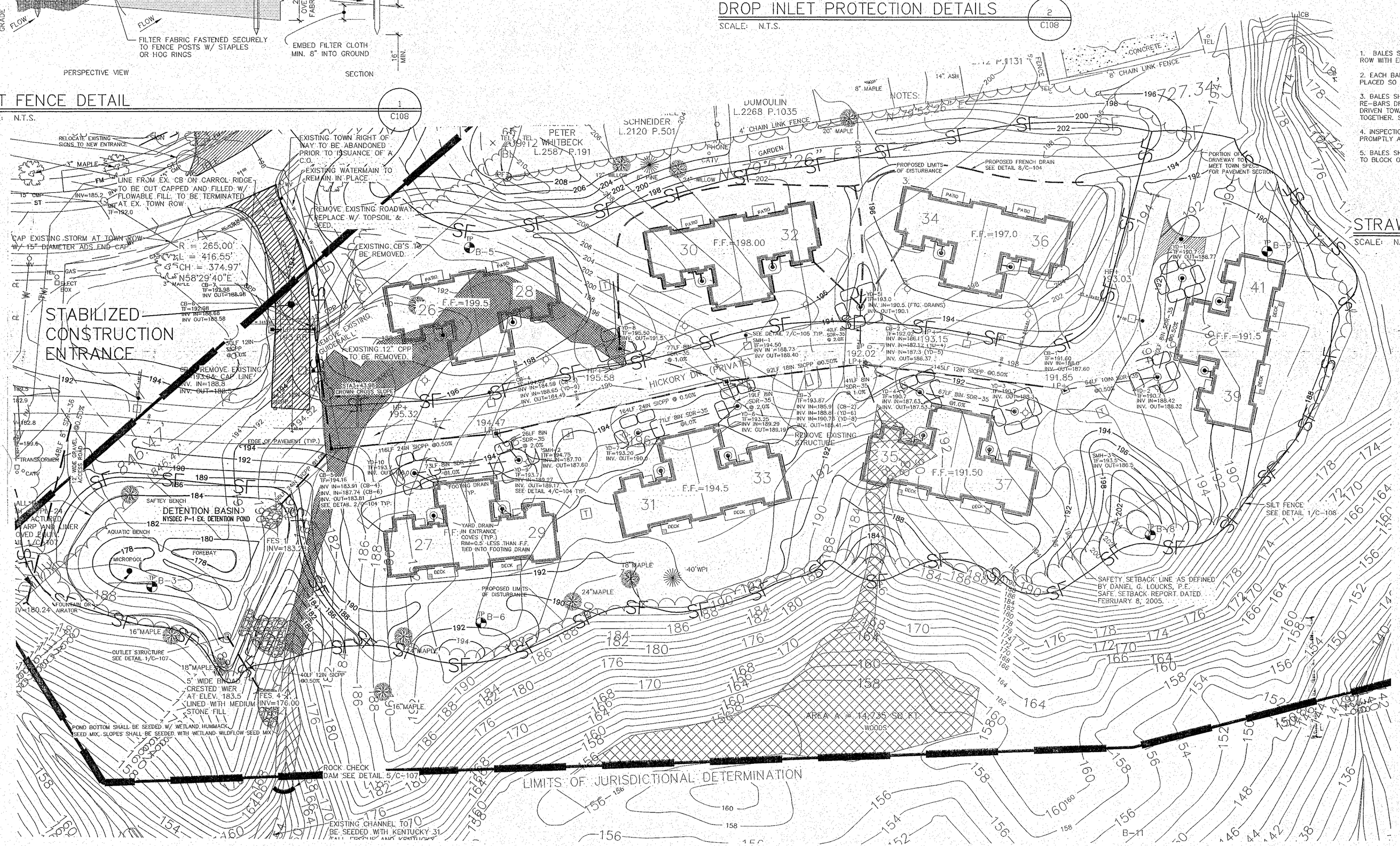
NOTES:
STABILIZED CONSTRUCTION ENTRANCE
DETENTION BASIN
NYSDEC P-1 EX. DETENTION POND
HICKORY DR. (PRIVATE)
LIMITS OF JURISDICTIONAL DETERMINATION
SAFETY SETBACK LINE AS DEFINED BY DANIEL G. LOUCKS, P.E. SAFE SETBACK REPORT DATED FEBRUARY 8, 2005.
SILT FENCE SEE DETAIL 1/C-108
PROPOSED FRENCH DRAIN SEE DETAIL 8/C-104
PROPOSED LIMITS OF DISTURBANCE
REMOVE EXISTING STRUCTURE
EXISTING 12" CPP TO BE REMOVED
EXISTING CB'S TO BE REMOVED
REMOVE EXISTING ROADWAY REPLACE W/ TOPSOIL & SEED
EXISTING TOWN RIGHT OF WAY TO BE ABANDONED PRIOR TO ISSUANCE OF A C.O.
EXISTING WATERMAIN TO REMAIN IN PLACE
CAP EXISTING STORM AT TOWN ROW W/ 15" DIAMETER ADS END CAP
ROCK CHECK DAM SEE DETAIL 5/C-107
EXISTING CHANNEL TO BE SEEDED WITH KENTUCKY 31
POND BOTTOM SHALL BE SEEDED W/ WETLAND HUMMOCK SEED MIX. SLOPES SHALL BE SEEDED WITH WETLAND WILDFLOW SEED MIX.
OUTLET STRUCTURE SEE DETAIL 1/C-107
5' WIDE BROAD CRESTED WER AT ELEV. 183.5 LINED WITH MEDIUM STONE FILL
AREA = 14.35 SQ. FT. WOODS
F.F.=198.00
F.F.=199.5
F.F.=197.0
F.F.=194.5
F.F.=191.50
F.F.=191.5
PETER WHITBECK L.2587 P.191
SCHNEIDER L.2120 P.501
DUMOULIN L.2268 P.1035
4' CHAIN LINK FENCE
8' CHAIN LINK FENCE
CONCRETE
GARDEN
PATIO
DECK
FOREBAY
AQUATIC BENCH
MICROPOOL
SAFETY BENCH
FES 1 INV=183.5
FES 2 INV=176.00
R = 265.00'
L = 416.55'
CH = 374.97'
N58°29'40"E
N79°56'26"E
N79°56'26"E
N79°56'26