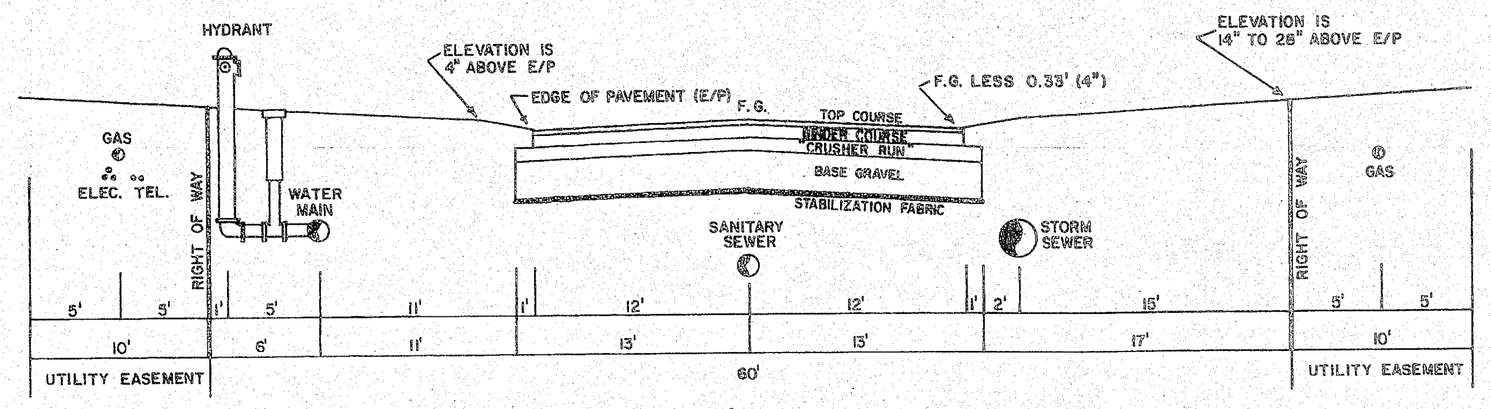

TYPICAL 60' RIGHT OF WAY

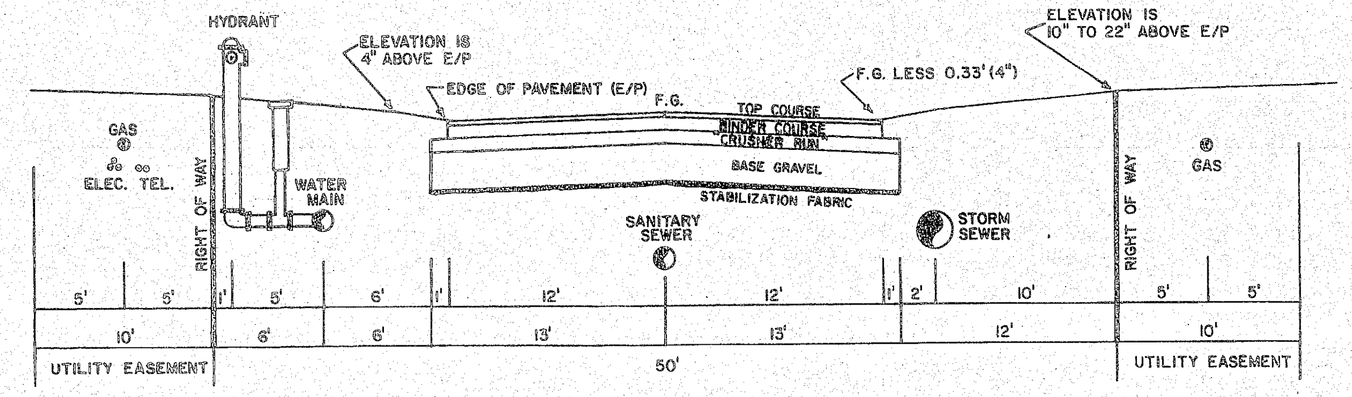

TYPICAL 50' RIGHT OF WAY

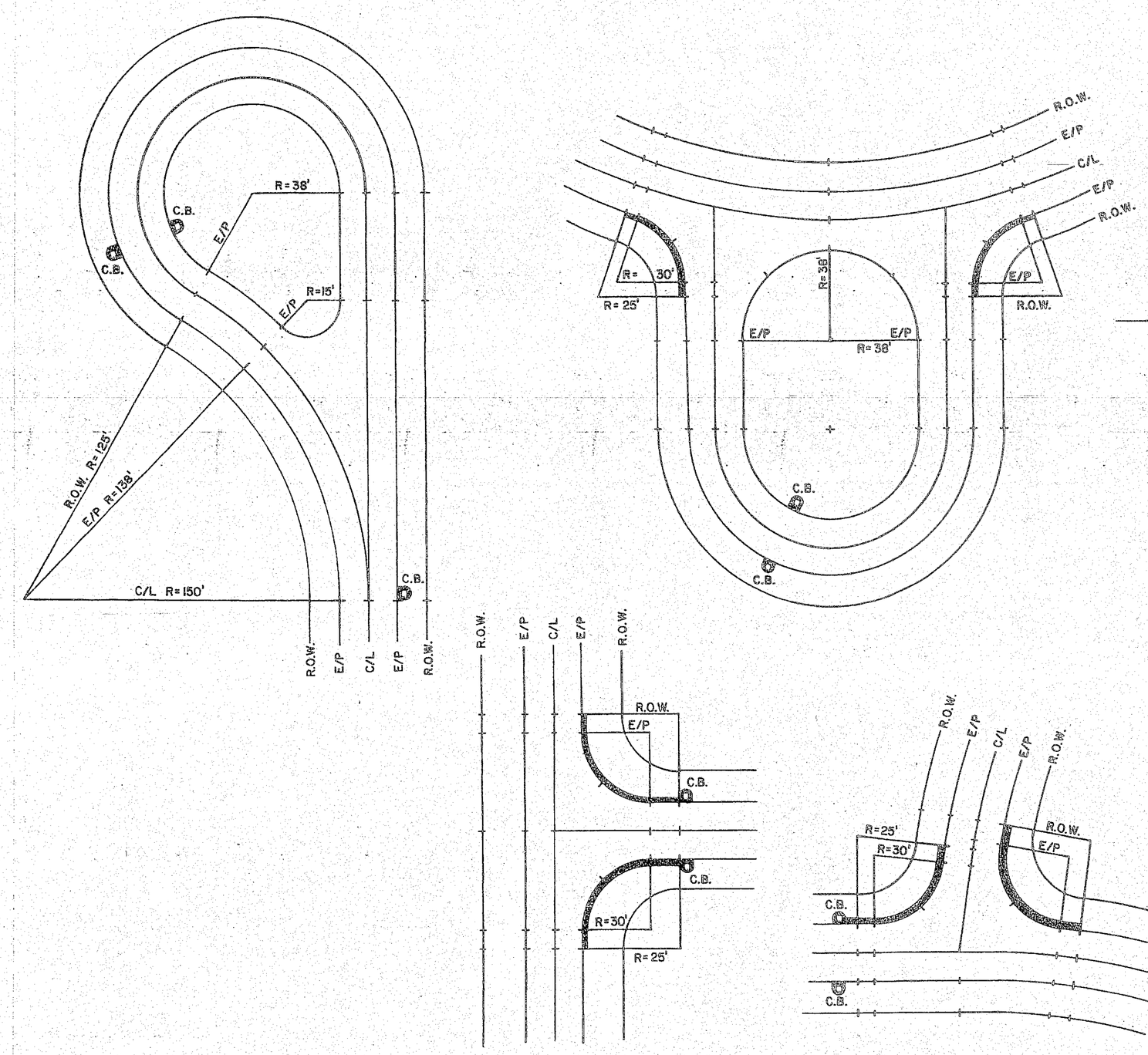

TYPICAL STREET AND CORNER CURVE LAYOUT

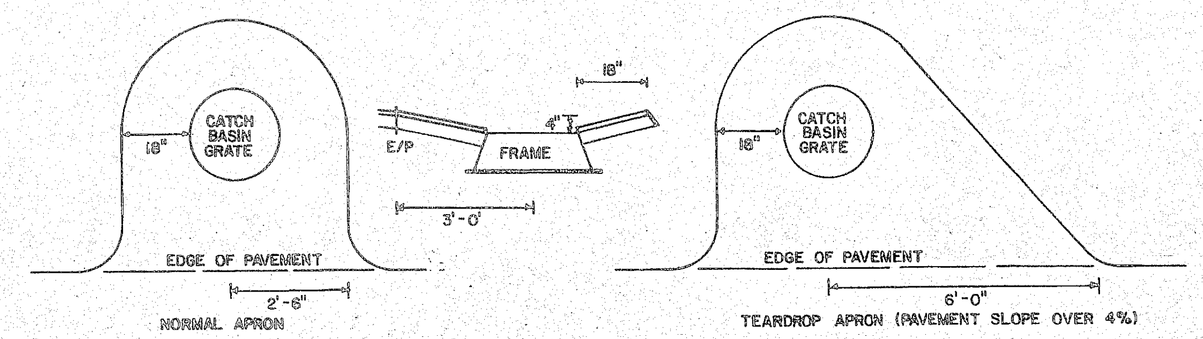

TYPICAL CATCH BASIN APRONS

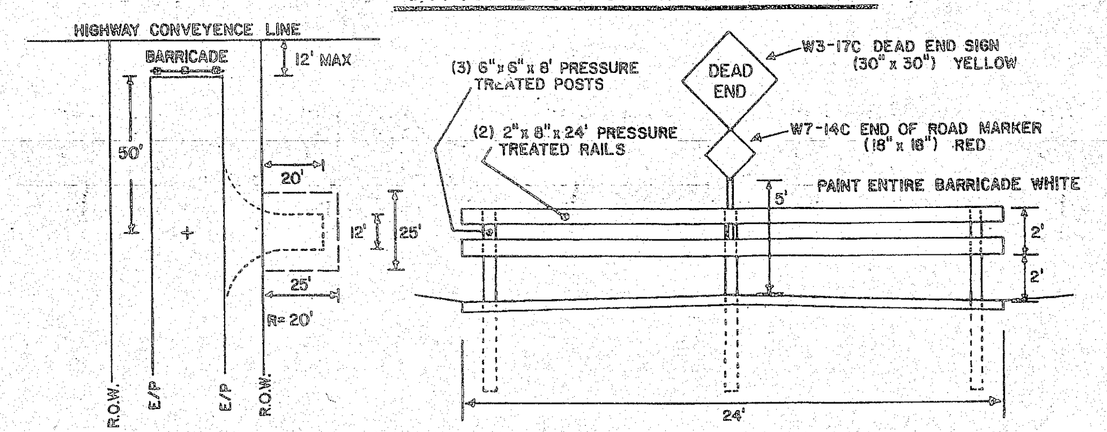

TYPICAL DEAD END, TEMPORARY TURN AROUND AND BARRICADE

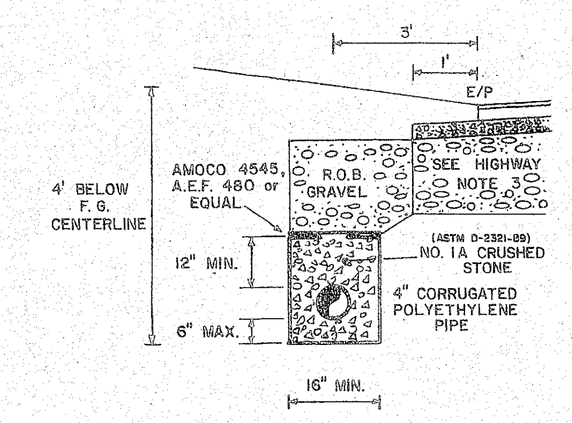

TYPICAL UNDERDRAIN DETAIL

PLANNING BOARD
TOWN OF BETHLEHEM
ALBANY COUNTY, NEW YORK

This plat APPROVED subject to such conditions as are stated in Building Project Approval (B/P/A)

No. 1994-36 Dated 3-7-06

Chairman Stanley E. Matthews

Title Chairman

Date 3/7/06

OBTAIN STANDARD SPECIFICATIONS

INCHES
Town of Bethlehem, NY

REVISIONS

DATE	BY	DESCRIPTION
10/91	TR	ORIGINAL
4/94	TR	UNDERDRAIN
5/96	TR	REMOVED AM INTERSECTION

HIGHWAY DETAILS

TOWN OF BETHLEHEM

DEPARTMENT OF PUBLIC WORKS

445 DELAWARE AVE. DELMAR N.Y. 12054

DRAWN BY: T. RITZ

APPROVED BY: B. SECOR

DATE: 10/91

SHEET 4 OF 5

Angerame Architects, P.C.
Architecture
Planning
Interior Design

30 Essex St.
Albany
New York 12206
P 518 454 9300
F 518 454 9333
W angerarchitects.com

Project

Beverwyck
A joint venture of Albany Guardian Society and The Eddy, a division of Northeast Health
Setting the Standard in Retirement Living

PHASE IV COTTAGES

Slingerlands, New York

Consultants

Civil:
Brett Steenburgh, P.E. P.L.L.C.
2832 Rosendale Road, Niskayuna, NY 12309
Phone: (518) 385-0675 Fax: (518) 831-9431

Landscape Architect:
Miller Associates
169 Haviland Road, Queensbury, NY 12804
Phone: (518) 792-4958 Fax: (518) 792-2511

Owner

Beechwood Inc.
2212 Burdett Avenue, Troy, NY 12180

Revisions

REVISED 01-29-06
REVISED 02-22-06
REVISED 02-23-06
REVISED 03-01-06
REVISED 03-24-06
REVISED 04-24-06
REVISED 05-21-06

STATE OF NEW YORK · STEENBURGH · 075455 · LICENSED PROFESSIONAL ENGINEER

Title

BETHLEHEM STD. DETAILS

Do not scale drawings - use dimensions shown, verify all dimensions on site. Unauthorized alterations or additions to this document is a violation of Sec. 7209 Sub. 2 of the NYS Education Law. Copyright 2004 Angerame Architects, P. C. All right reserved. No use or reproduction of this material is permitted without the express written consent of Angerame Architects, P. C.

Drawing Number

C-109

Date: AUGUST 5, 2004