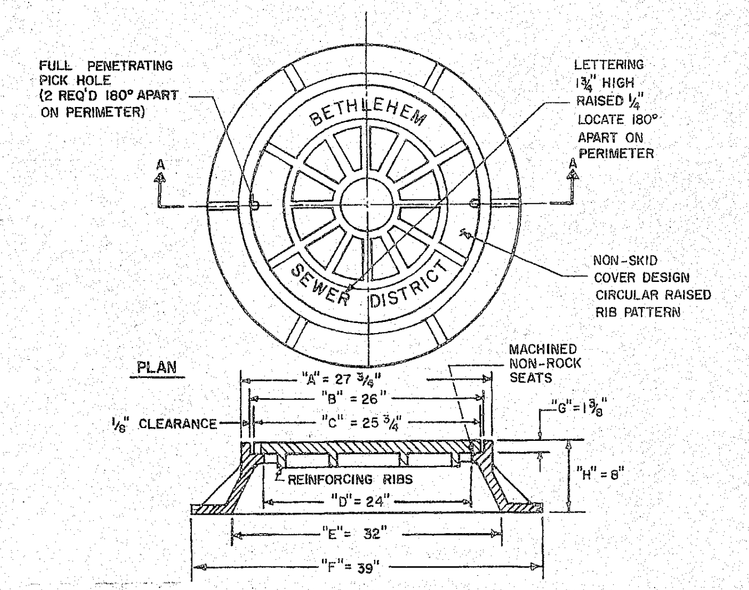

Neenah 1559-2000 frame with a 1556 cover, or Campbell 1203 frame with a 1009 cover

NOTE: WHEN A WATERTIGHT COVER IS REQUIRED, USE CAMPBELL FOUNDARY 1502 FRAME AND COVER OR AN ECCENTRIC MANHOLE CONE SECTION WITH A 24" DIA. OPENING.

STANDARD CAST IRON MH COVER DETAIL

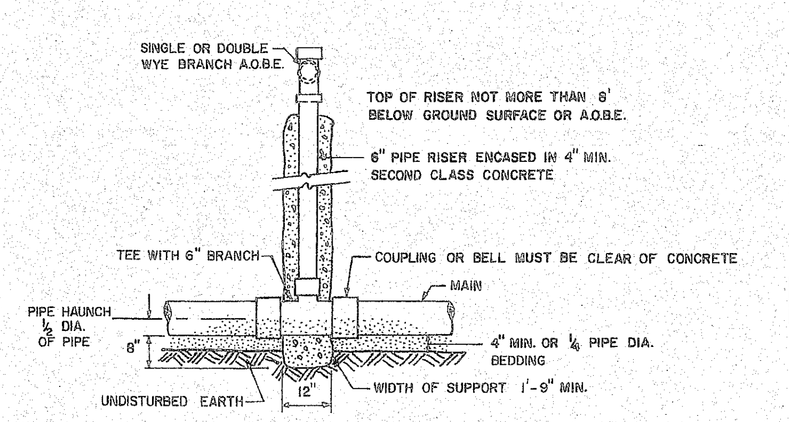

VERTICAL PIPE RISER DETAIL

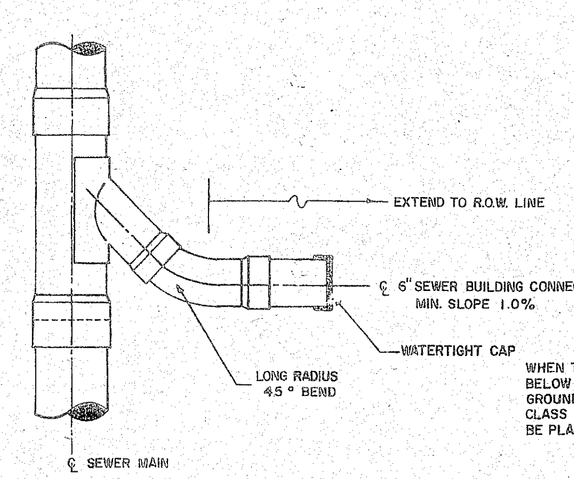

WYE SEWER BUILDING CONNECTION

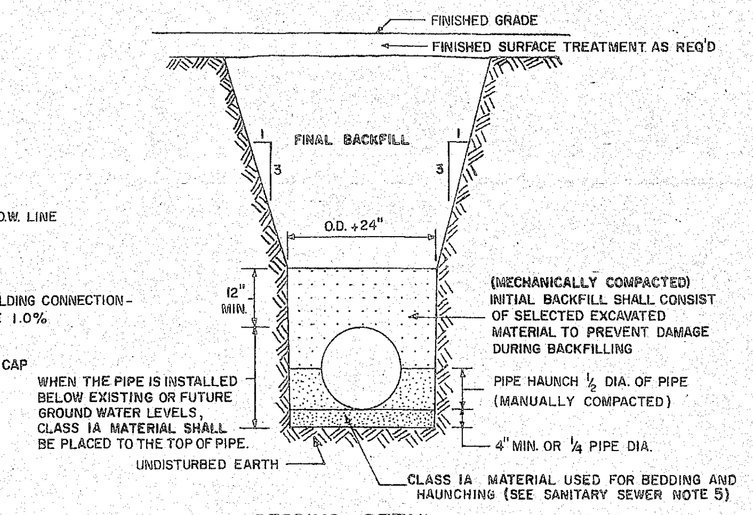

BEDDING DETAIL

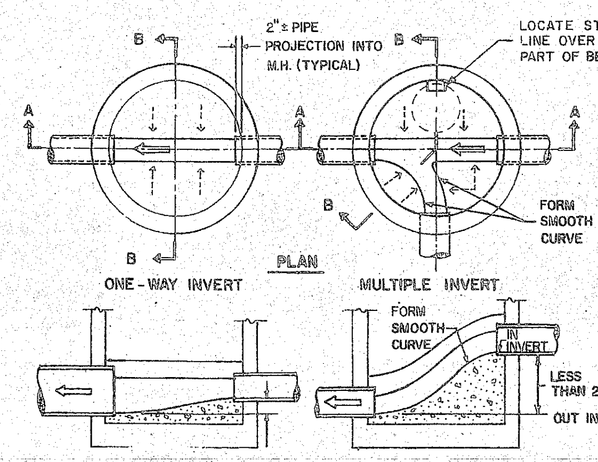

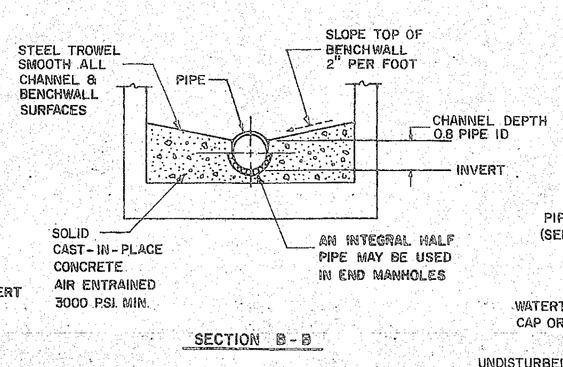

INVERT, CHANNEL AND BENCHWALL DETAILS

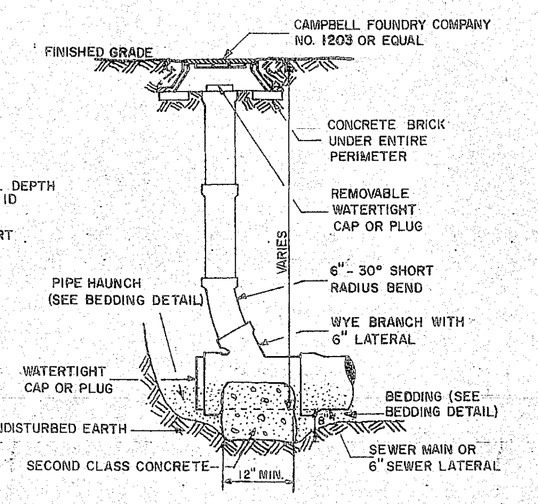

LAMPHOLE DETAIL

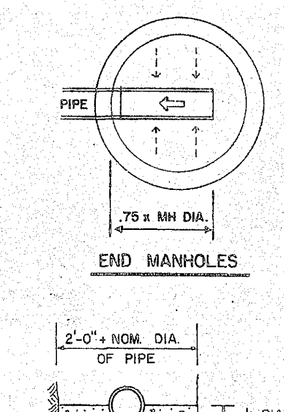

END MANHOLES

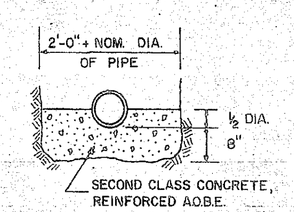

CONCRETE PIPE CRADLE

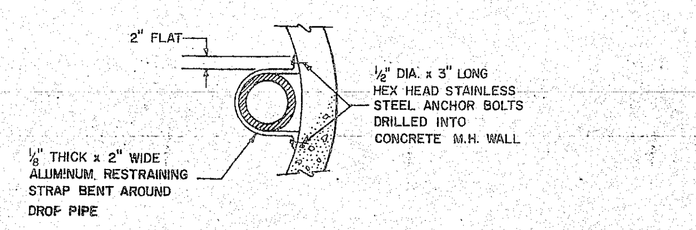

DETAIL "A"

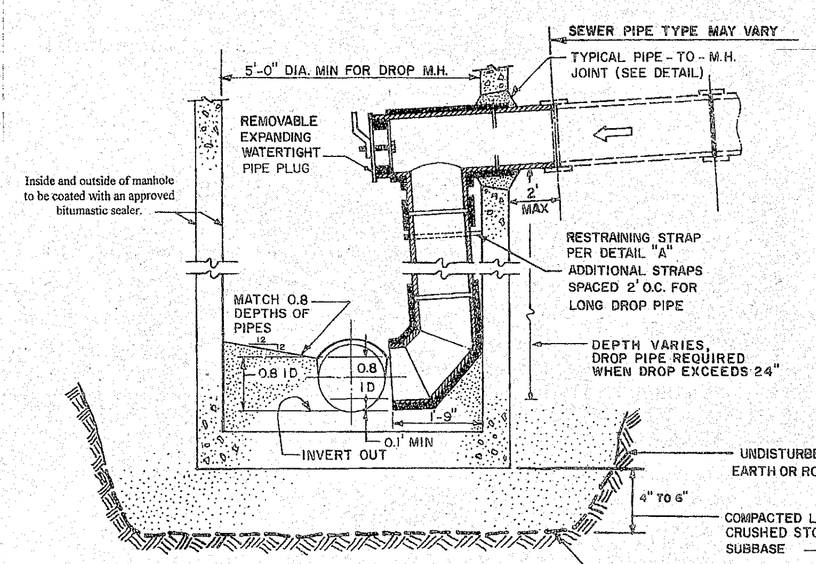

DROP MANHOLE DETAIL

WHEN PRECAST MANHOLES ARE TO BE USED, SHOP DRAWINGS MUST BE SUBMITTED FOR APPROVAL.

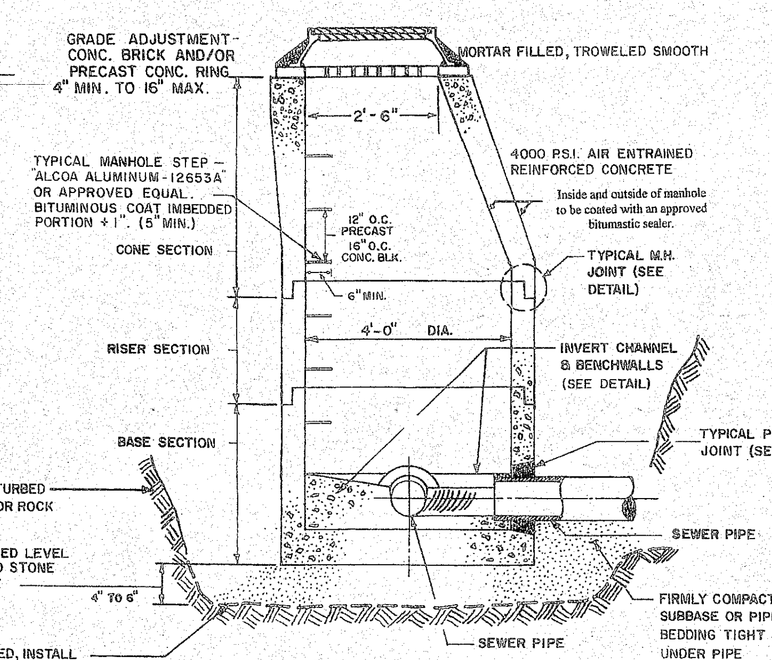

PRECAST CONCRETE MANHOLE DETAIL

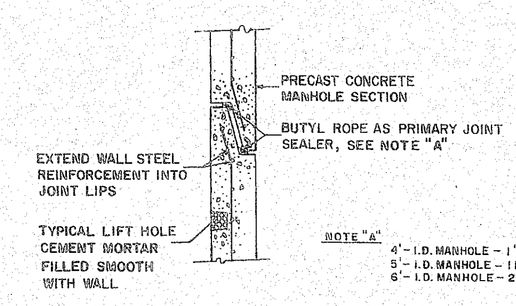

M.H. JOINT DETAIL

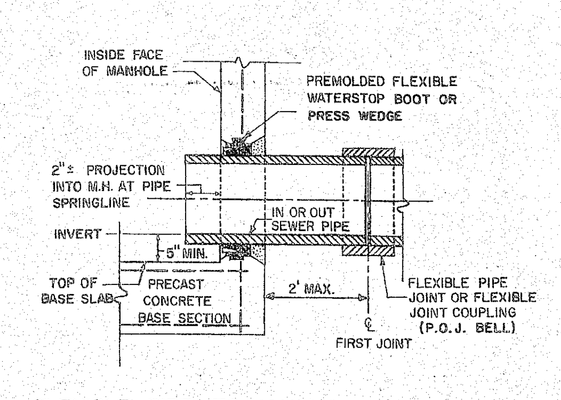

FLEXIBLE PIPE-TO-M.H. JOINT DETAIL

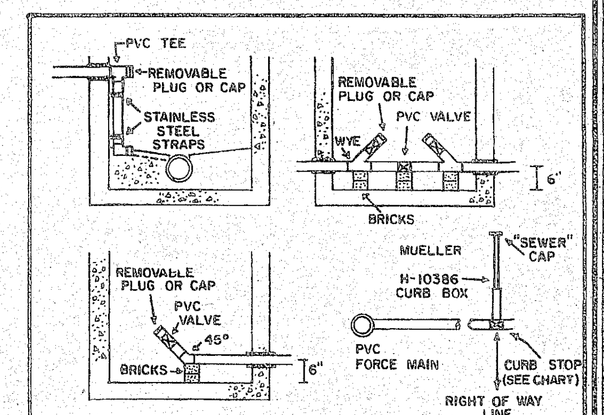

SMALL DIAMETER PVC FORCE MAINS

CURB STOPS		
	FORD	MUELLER
1 1/4"	B11-555	n/a
1 1/2"	B11-666	B-20283
2"	B11-777	B-20283

OBTAIN STANDARD SPECIFICATIONS

INCHES 0 1
Town of Bethlehem, NY

PLANNING BOARD
TOWN OF BETHLEHEM
ALBANY COUNTY, NEW YORK
This plat APPROVED subject to such conditions as are stated in Building Project Approval (BPA)
Approved Dated 3-7-06
Chairperson Richard Mathes
Title Chairman
Date 7/17/06

REVISIONS

DATE	BY	DESCRIPTION
2/6/06	CW	ADD TO BEDDING DETAIL + NOTES SUB. M.H. JOINT DETAIL.
7/12/04	TWR	STONE, NO BLOCK, NEW NOTES
2/2/94	CW	ADD CURB STOP CHART.
4/94	TR	NEW FRAME
3/93	TR	FRAMES AND COVERS

SANITARY SEWER DETAILS

TOWN OF BETHLEHEM
DEPARTMENT OF PUBLIC WORKS
445 DELAWARE AVE. DELMAR N.Y. 12054

SCALE: NONE
DRAWN BY: D.C. BRIGGS, JR.
APPROVED BY: F. J. SECOR
DATE:
SHEET 1 OF 5

Angerame Architects, P.C.
Architecture Planning Interior Design
30 Essex St.
Albany
New York 12206
P 518 454 9300
F 518 454 9333
W angerameararchitects.com

Project

Beverwyck
A partnership of Albany Guardian Society and The Daily, a member of Northeast Health
Setting the Standard in Retirement Living

PHASE IV COTTAGES

Slingerlands, New York

Consultants

Civil:
Brett Steenburgh, P.E. P.L.L.C.
2832 Rosendale Road, Niskayuna, NY 12309
Phone: (518) 365-0575 Fax: (518) 831-9431

Landscape Architect:
Miller Associates
169 Haviland Road, Queensbury, NY 12804
Phone: (518) 792-4958 Fax: (518) 792-8511

Owner
Beechwood Inc.
2212 Burdett Avenue, Troy, NY 12180

Revisions
REVISED 01-29-06
REVISED 02-22-06
REVISED 02-23-06
REVISED 03-01-06
REVISED 03-24-06
REVISED 04-24-06
REVISED 05-21-06

Title
BETHLEHEM STD. DETAILS

Do not scale drawings – use dimensions shown, verify all dimensions on site. Unauthorized alterations or additions to this document is a violation of Sec. 7209 Sub. 2 of the NYS Education Law. Copyright 2004 Angerame Architects, P. C. All right reserved. No use or reproduction of this material is permitted without the express written consent of Angerame Architects, P. C.

Drawing Number
C-110
Date: AUGUST 5, 2004