STANDARD GAUGE FOR C.M.P.

MIN. BAND WIDTH (IN)	DIAMETER (INCHES)	REQUIRED GAUGE
7	6	18
7	8	16
7	10	16
7	12	16
7	18	16
7	18	16
7	21	16
7	24	16
7	30	14
10.5	36	14
10.5	42	12
10.5	48	12
10.5	54	12
10.5	60	10
10.5	72	10
10.5	84	8

GAUGES LISTED ARE FOR STANDARD INSTALLATIONS, SHALLOW OR DEEP INSTALLATIONS MAY REQUIRE HEAVIER GAUGES

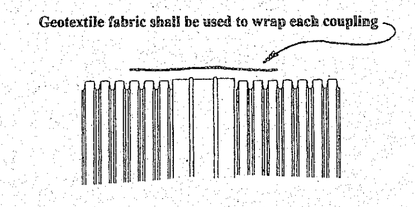

TYPICAL JOINT DETAILS
HIGH DENSITY POLYETHYLENE PIPE

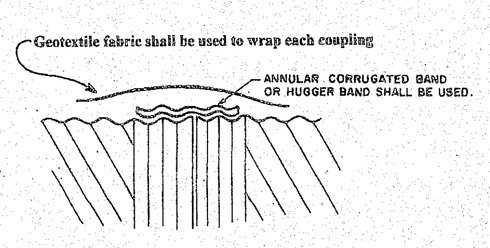

HELICALLY CORRUGATED WITH ANNULAR ROLLED ENDS

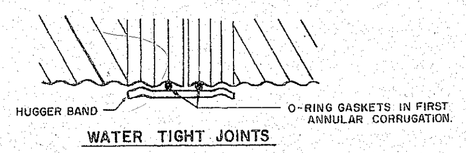

WATER TIGHT JOINTS

TYPICAL C.M.P. JOINT DETAILS

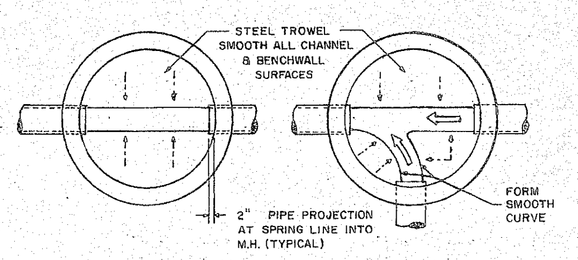

INVERT, CHANNEL AND BENCHWALL DETAILS

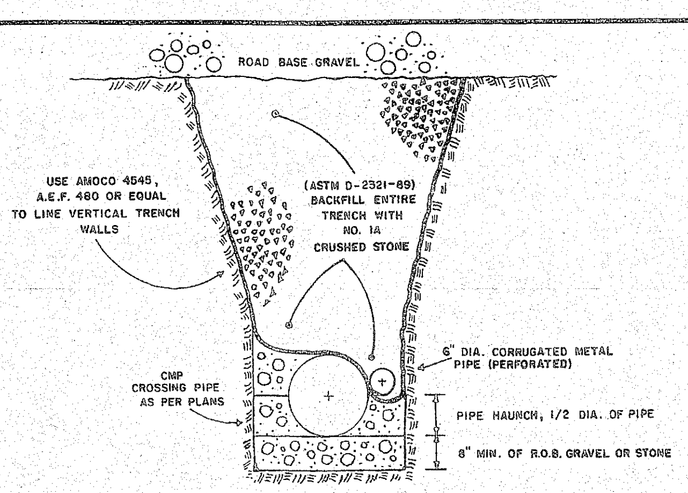

TYPICAL STREET LOW POINT TRENCH CROSSING

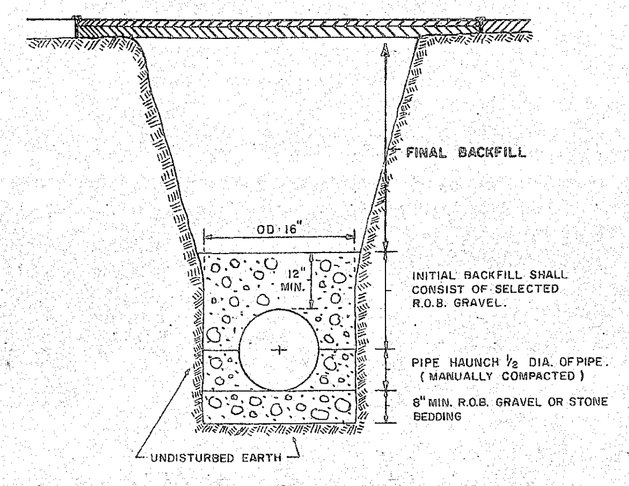

TYPICAL TRENCH DETAIL

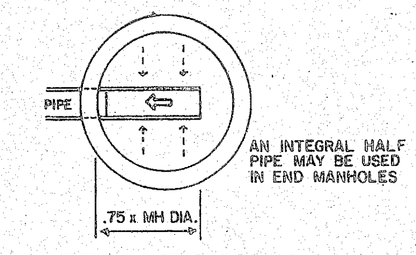

END MANHOLES

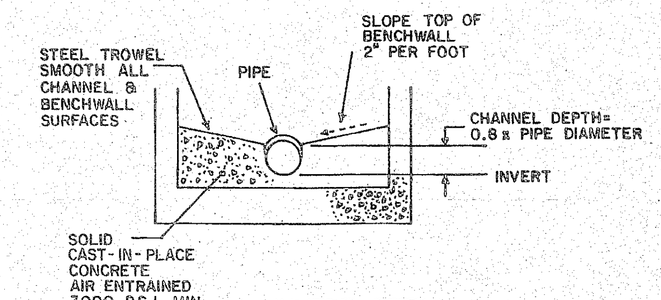

INVERT DETAIL

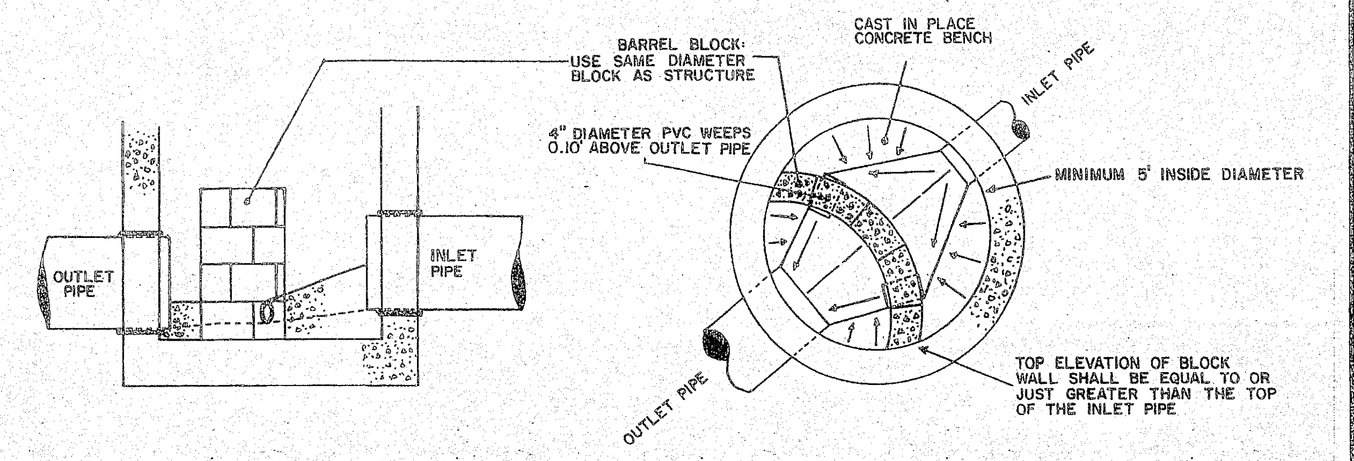

ENERGY DISSIPATING STRUCTURE

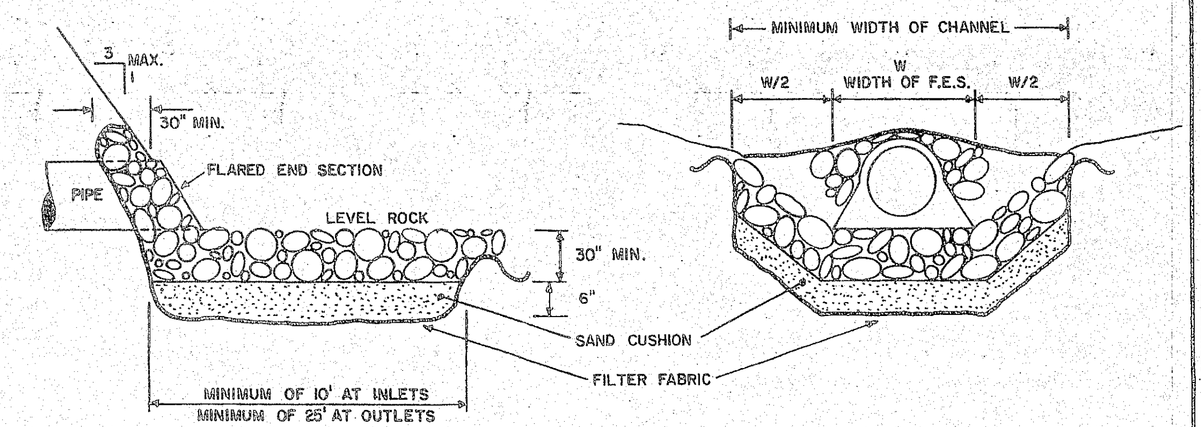

TYPICAL ROCK OUTLET PROTECTION DETAIL

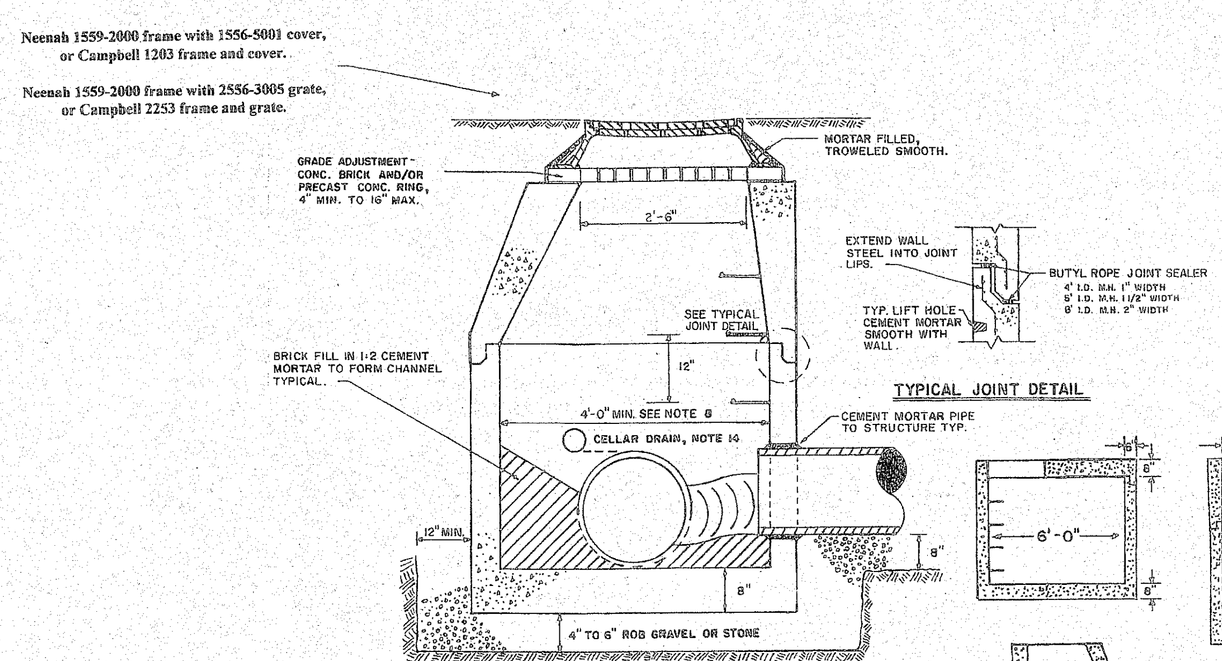

TYPICAL JOINT DETAIL

PRECAST CONCRETE TYPE

CATCH BASIN AND/OR MANHOLE DETAILS

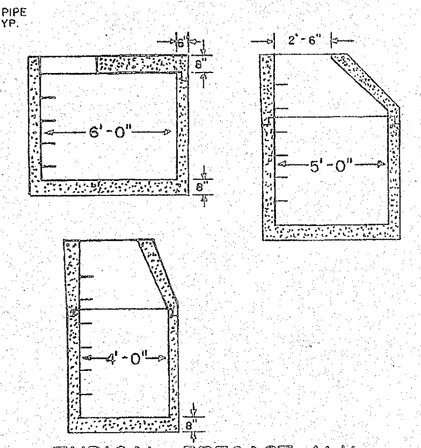

TYPICAL PRECAST M.H.s

OBTAIN STANDARD SPECIFICATIONS

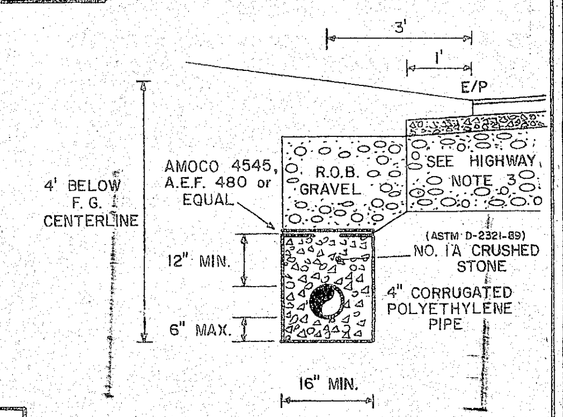

TYPICAL UNDERDRAIN DETAIL

INCHES
Town of Bethlehem, NY

PLANNING BOARD
TOWN OF BETHLEHEM
ALBANY COUNTY, NEW YORK
This plat APPROVED subject to such conditions as are stated in Building Project Approval (B/P/A)
No. BPA#36 Dated 3-7-06
Chairperson Frederick Smithson
Title Chairman
Date 3/13/06

REVISIONS

DATE	BY	DESCRIPTION
6/86	CW	ORIGINAL
4/87	LS	ADD PRECAST M.H. NOTE
9/91	TR	END, INVERT, ENERGY, ROCK
4/92	TR	UNDERDRAIN DETAIL
6/92	TR	TYPICAL PRECAST MHS
5/93	TR	LOW POINT TRENCH
4/94	TR	CONE SECTIONS, BAND WIDTH
5/98	TR	FRAMES AND COVERS

STORM DRAINAGE DETAILS

TOWN OF BETHLEHEM
DEPARTMENT OF PUBLIC WORKS
445 DELAWARE AVE. DELMAR N.Y. 12054

SCALE: NONE
DRAWN BY: C. WICKHAM JR.
APPROVED BY: B.H. SECOR
DATE:
SHEET 3 OF 5

Angerame Architects P.C.
Architecture
Planning
Interior Design
30 Essex St.
Albany
New York 12206
P 518 454 9300
F 518 454 9333
W angeramearchitects.com

Project

Beverwyck
A division of Albany Guardian Realty and The GLCO, A Member of Uniform Health
Setting the Standard in Retirement Living

PHASE IV COTTAGES

Slingerlands, New York

Consultants

Civil:
Brett Steenburgh, P.E. P.L.L.C.
2832 Rosendale Road, Niskayuna, NY 12309
Phone: (518) 355-0675 Fax: (518) 831-9431
Landscape Architect:
Miller Associates
169 Haviland Road, Queensbury, NY 12804
Phone: (518) 792-4958 Fax: (518) 792-8511

Owner

Beechwood Inc.
2212 Burdett Avenue, Troy, NY 12180

Revisions
REVISED 01-29-06
REVISED 02-22-06
REVISED 02-23-06
REVISED 03-01-06
REVISED 03-24-06
REVISED 04-24-06
REVISED 05-21-06

STATE OF NEW YORK · BRETT L. STEENBURGH · 075458 · PROFESSIONAL ENGINEER

Title
BETHLEHEM STD. DETAILS

Do not scale drawings - use dimensions shown, verify all dimensions on site. Unauthorized alterations or additions to this document is a violation of Sec. 7209 Sub. 2 of the NYS Education Law. Copyright 2004 Angerame Architects, P. C. All rights reserved. No use or reproduction of this material is permitted without the express written consent of Angerame Architects, P. C.

Drawing Number
C-111

Date: AUGUST 5, 2004