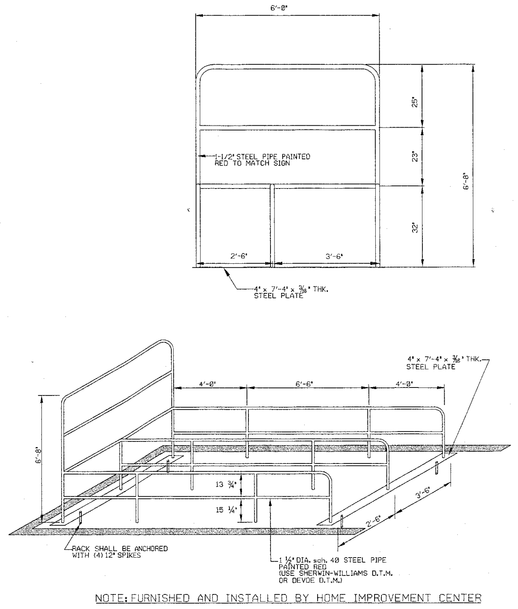

NOTE: FURNISHED AND INSTALLED BY HOME IMPROVEMENT CENTER

HOME IMPROVEMENT CENTER CART CORRAL

N.T.S.

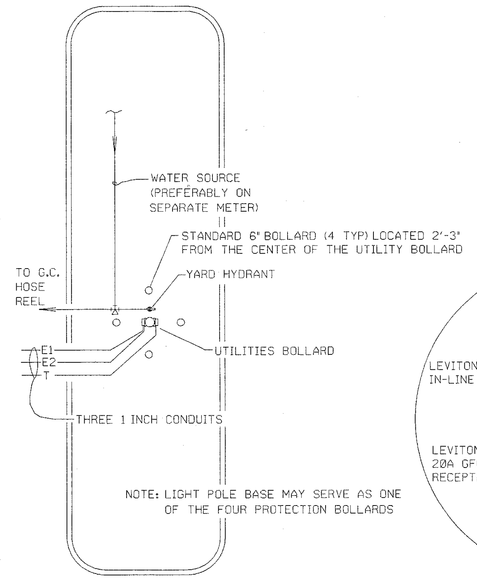

PLAN VIEW

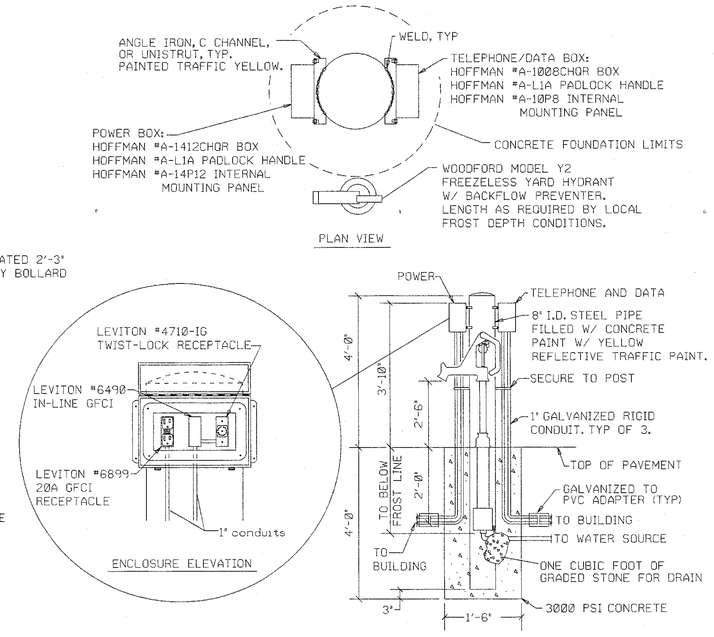

WAL-MART REMOTE GARDEN CENTER UTILITY BOLLARD DETAIL

N.T.S.

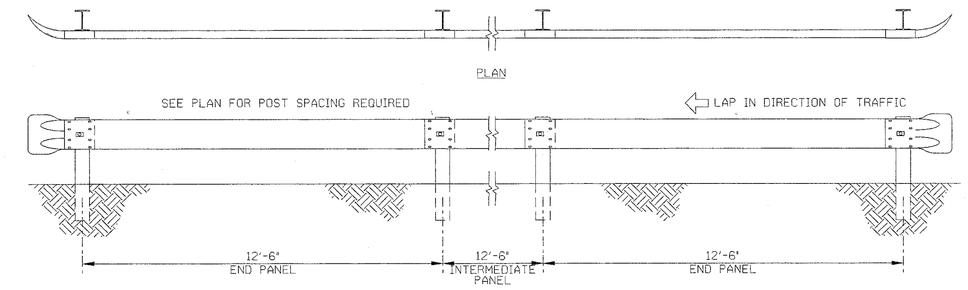

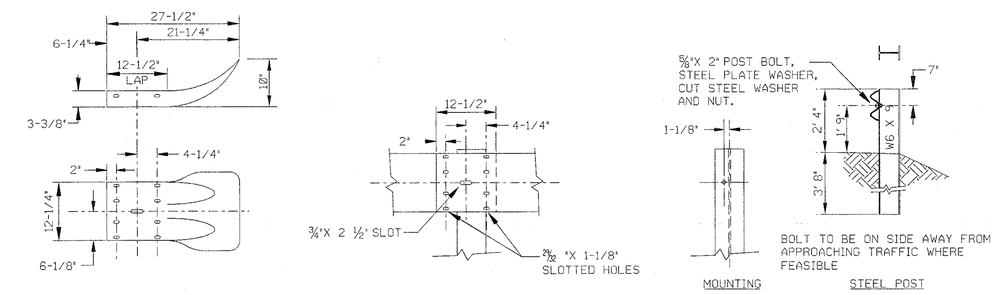

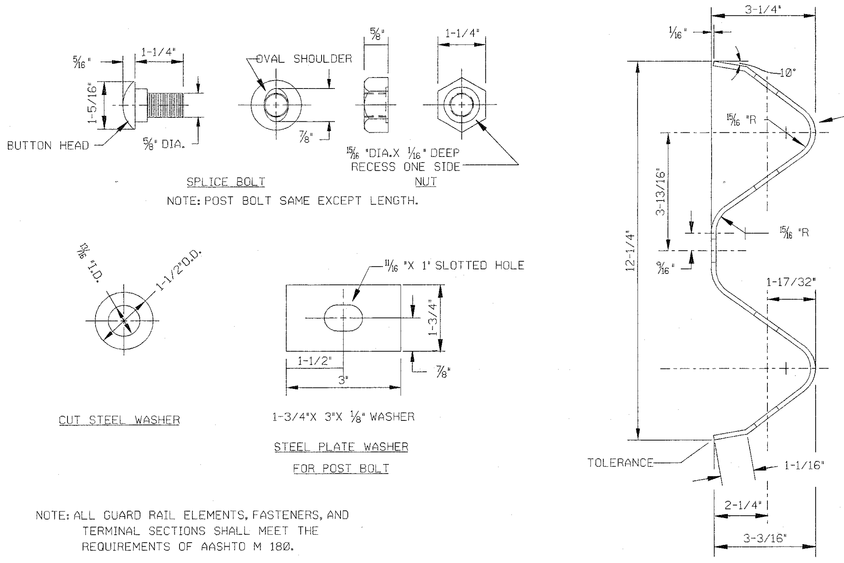

NOTE: ALL GUARD RAIL ELEMENTS, FASTENERS, AND TERMINAL SECTIONS SHALL MEET THE REQUIREMENTS OF AASHTO M 180.

GUIDE RAIL

N.T.S.

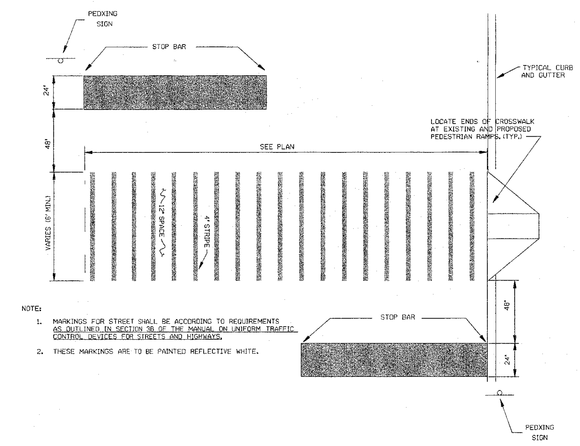

NOTE:
1. MARKINGS FOR STREET SHALL BE ACCORDING TO REQUIREMENTS AS SPECIFIED IN SECTION 3B OF THE MANUAL ON UNIFORM TRAFFIC CONTROL DEVICES FOR STREETS AND HIGHWAYS.
2. THESE MARKINGS ARE TO BE PAINTED REFLECTIVE WHITE.

WAL-MART CROSSWALK MARKINGS

N.T.S.

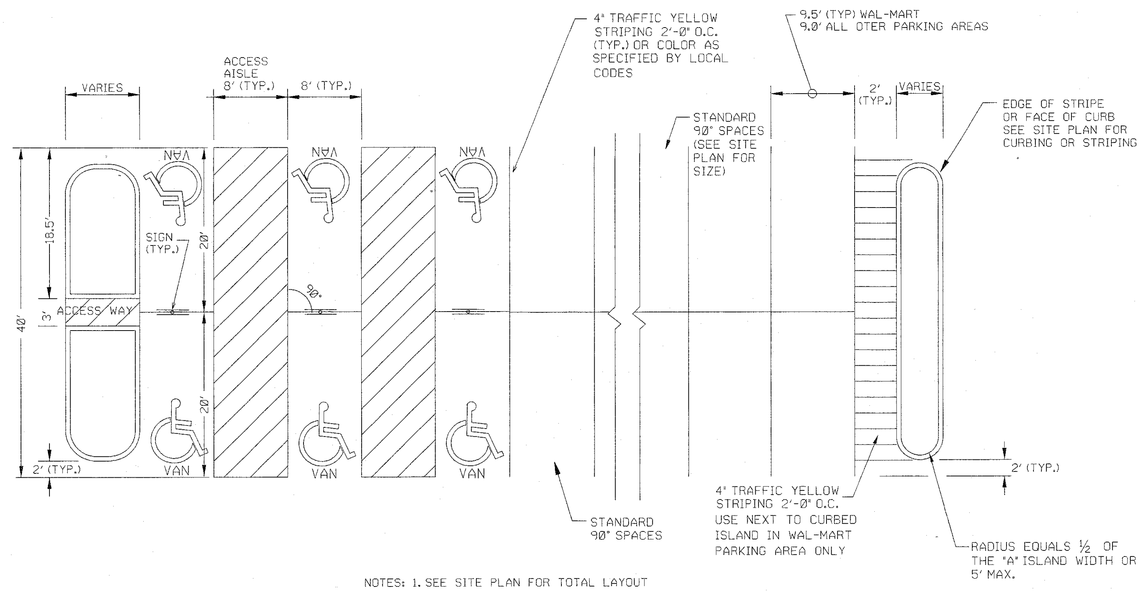

NOTES:
1. SEE SITE PLAN FOR TOTAL LAYOUT
2. THESE DETAILS ARE FOR REFERENCE AND DIMENSION CONTROL ONLY
3. 8' ACCESS AISLE SHALL BE PLACED ON THE PASSENGER SIDE OF A VAN ACCESSIBLE SPACE
4. ALL DIMENSIONS ARE TO ℄ OF STRIPE UNLESS OTHERWISE INDICATED

90° STRIPING DETAIL

HANDICAP / PARKING LOT STRIPING DETAILS

N.T.S.

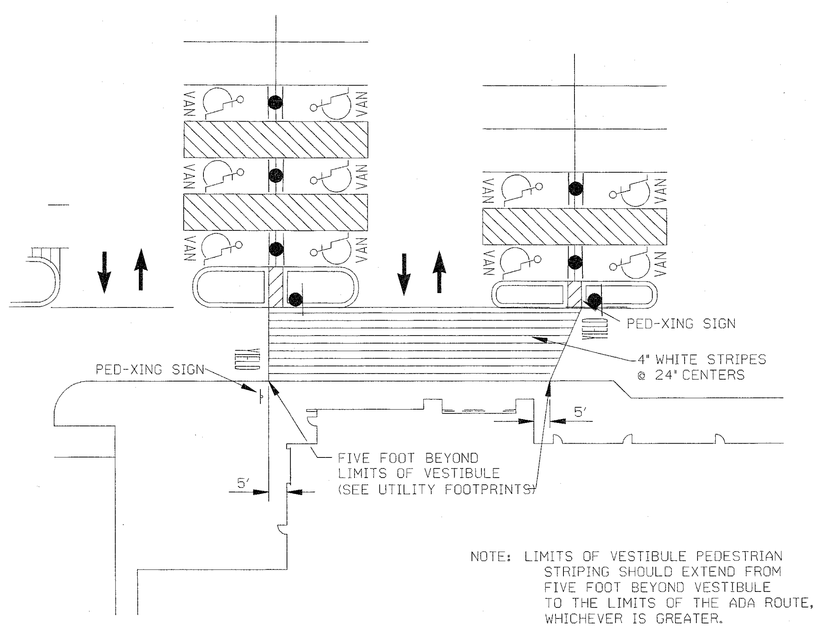

NOTE: LIMITS OF VESTIBULE PEDESTRIAN STRIPING SHOULD EXTEND FROM FIVE FOOT BEYOND VESTIBULE TO THE LIMITS OF THE ADA ROUTE, WHICHEVER IS GREATER.

WAL-MART VESTIBULE CROSSWALK STRIPING

N.T.S.

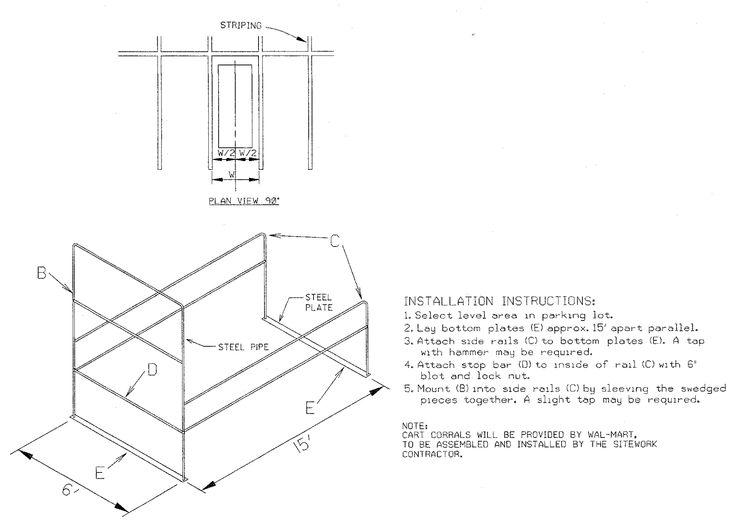

WAL-MART SINGLE ENTRY CART CORRAL

N.T.S.

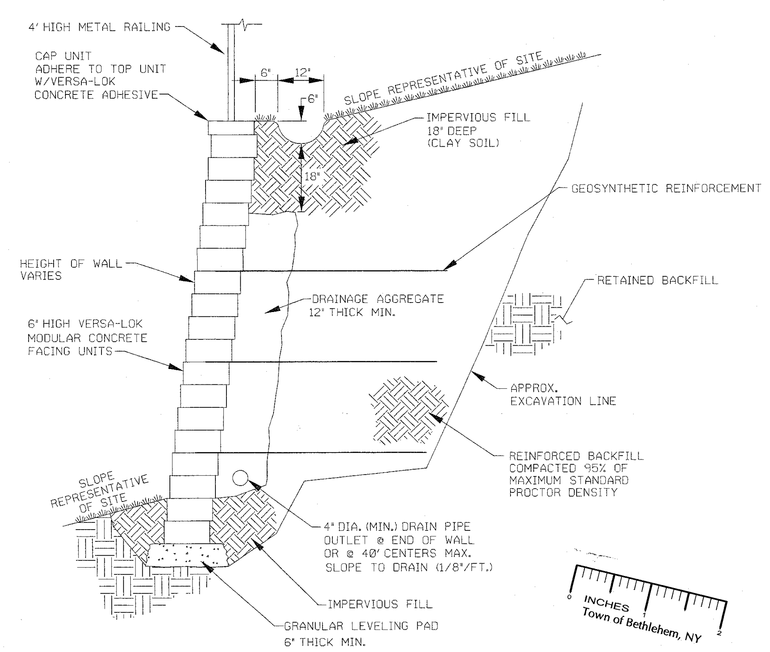

TYPICAL SECTION

MODULAR CONCRETE UNIT REINFORCED RETAINING WALL

NTS

NOTE:
CONTRACTOR SHALL SUBMIT CATALOG CUT SHEETS TO BUILDING DEPARTMENT FOR APPROVAL.

NOTE:
SEE NYSDOT HIGHWAY PLANS PREPARED BY SEAR-BROWN FOR ALL WORK WITHIN ALL RIGHT-OF-WAYS.

17	VARIOUS PER COND. APPR.	3/9/03	PEB
16	VARIOUS PER COND. APPR.	2/14/03	PEB
15	VARIOUS PER COND. APPR. 2/05/03		PEB
14	NORTH WETLAND MITIGATION, ZONE 3	1/25/02	PEB
13	PHASING AND LOT DIVISION PLANS	8/14/02	PEB
12	PHASING PLANS PER TOWN COMM.	7/23/02	PEB
11	PHASING AND LOT DIVISION PLANS	7/15/02	PEB
10	PHASING AND LOT DIVISION PLANS	6/18/02	PEB
9	VAR. PER 1/17/02 TOWN COM. LETTER	2/28/02	PEB
8	VAR. PER TOWN, PROFILE SHTS. ADDED	1/10/02	PEB
7	VAR. PER TOWN, TENANTS, WETLAND C	12/31/01	PEB
6	VARIOUS PER HLLC, BLDG., REST., ISLDS	11/29/01	PEB
5	VARIOUS PER TOWN	10/29/01	PEB
4	VARIOUS PER TOWN	10/04/01	PEB
3	VARIOUS PER NORTH RETAIL CHANGE	8/22/01	PEB
2	VARIOUS PER TOWN/UTILITIES, GRADING	8/07/01	PEB
1	VARIOUS PER TOWN 6/7/01 COMMENTS	6/25/01	PEB
0	SUMP 8" STORM STRUCTURES	5/29/01	PEB
	REVISIONS	DATE	BY

COPYRIGHT © 2003 SEAR-BROWN
DRAWING ALTERATION
IT IS A VIOLATION OF LAW FOR ANY PERSON, UNLESS ACTING UNDER THE DIRECTION OF A LICENSED PROFESSIONAL ARCHITECT, ENGINEER OR LAND SURVEYOR TO ALTER IN ANY WAY AN ITEM BEARING THE SEAL OF A LICENSED PROFESSIONAL ARCHITECT, ENGINEER OR LAND SURVEYOR. ALTERATION OF A DOCUMENT BEARING SUCH A SEAL IS RECORD OF THE ALTERATION.

PROJECT ENGINEER/ARCHITECT
L. MERWIN
PROJECT MANAGER
F. PALUMBO
DRAWN BY
P. BALASCO
SCALE
N.T.S.
FIRST ISSUE DATE
5/24/2001

LICENSED PROFESSIONAL ENGINEER JOSEPH PAUL SOIL

SEAR-BROWN
109 Great Oaks Boulevard
Albany, N.Y. 12203
(518) 464-1712
Fax (518) 464-0767
www.searbrown.com

PROJECT
BETHLEHEM TOWN CENTER
GLENMONT, NEW YORK
NIGRO COMPANIES

TITLE OF DRAWING
DETAILS

PROJECT NO.
16046

DRAWING NO.
SE 18

Workspace: DEFAULT
Project: SBG
Node: PCBR147
Plotting Parameters
Plotted By: pbalasco
Date/Time: 10/29/2003 4:48:51 PM
Design File: b:\jobs\16046\dfm\blues\se18.dgn
Plot Scale: 1 = 1 Inches
Plot Group: $WSLAYOUT(3)