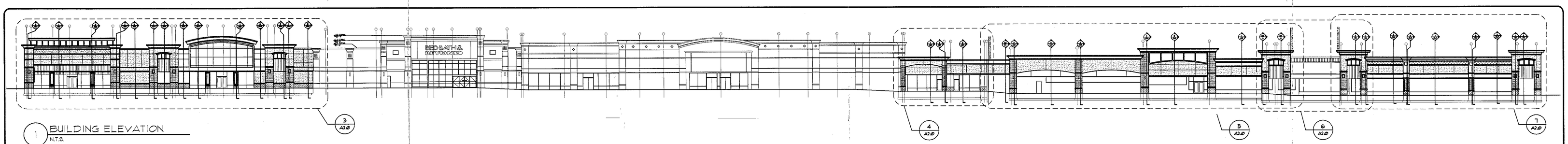

1 BUILDING ELEVATION
N.T.S.

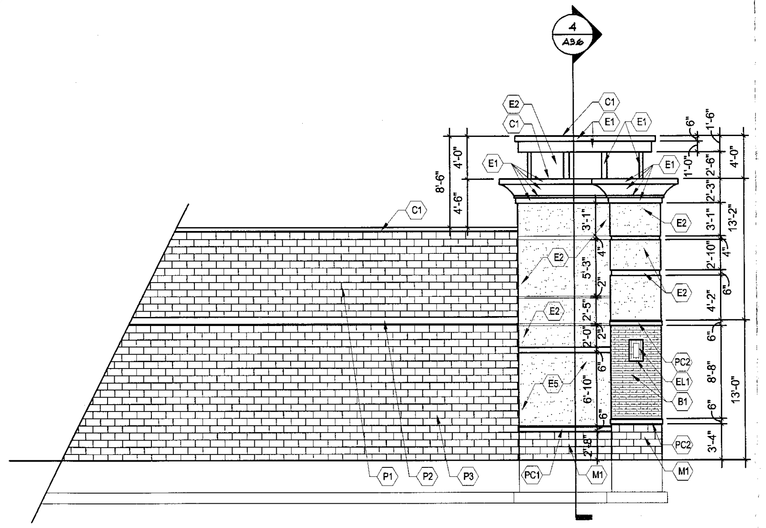

2 PARTIAL ELEVATION
SCALE: 1/8" = 1'-0"

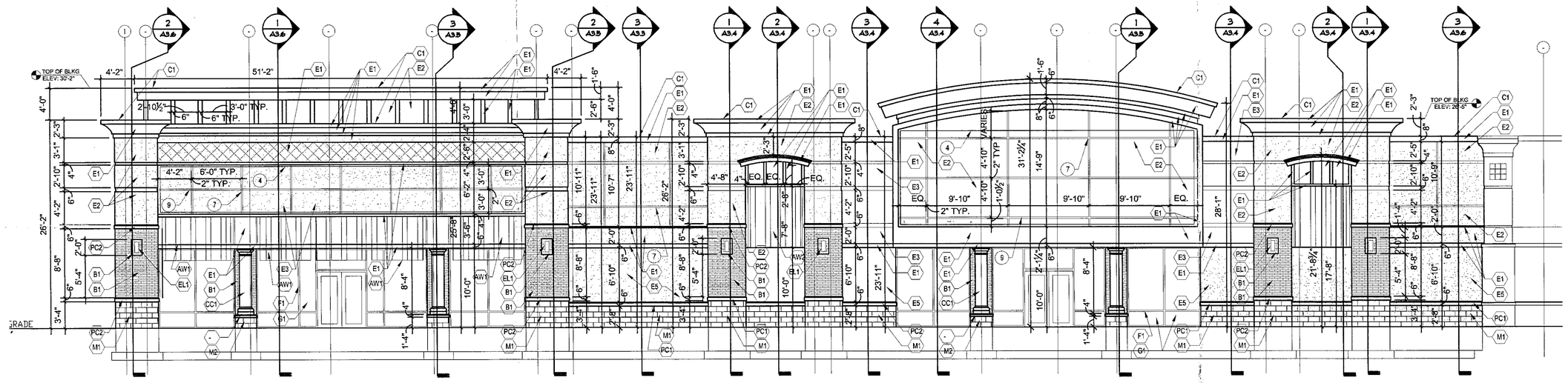

3 PARTIAL ELEVATION
SCALE: 1/8" = 1'-0"

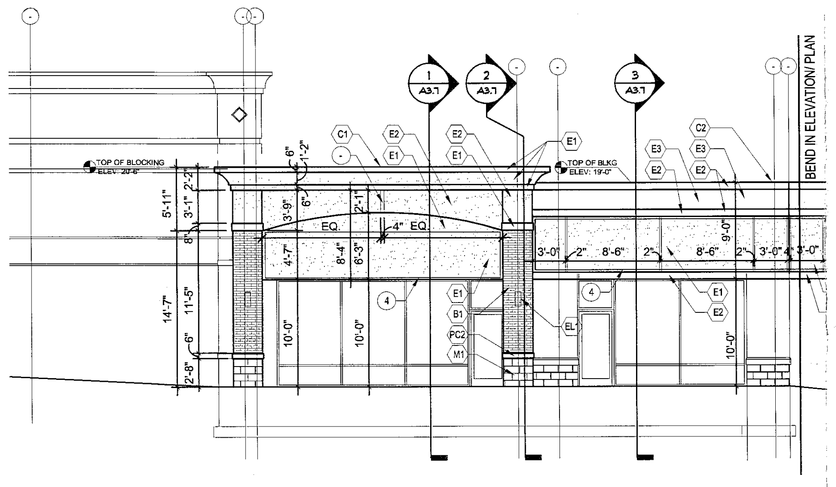

4 PARTIAL ELEVATION
SCALE: 1/8" = 1'-0"

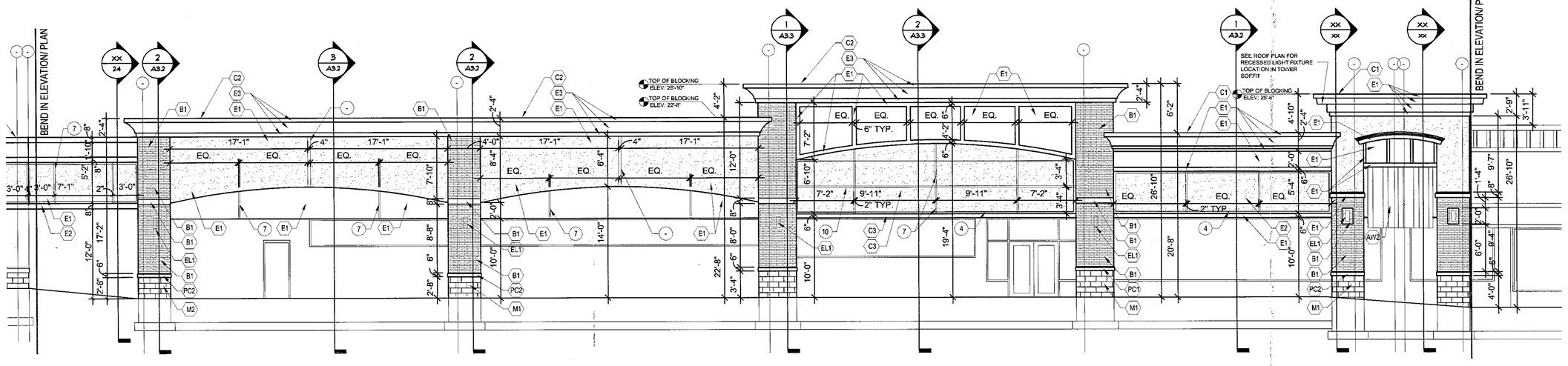

5 PARTIAL ELEVATION
SCALE: 1/8" = 1'-0"

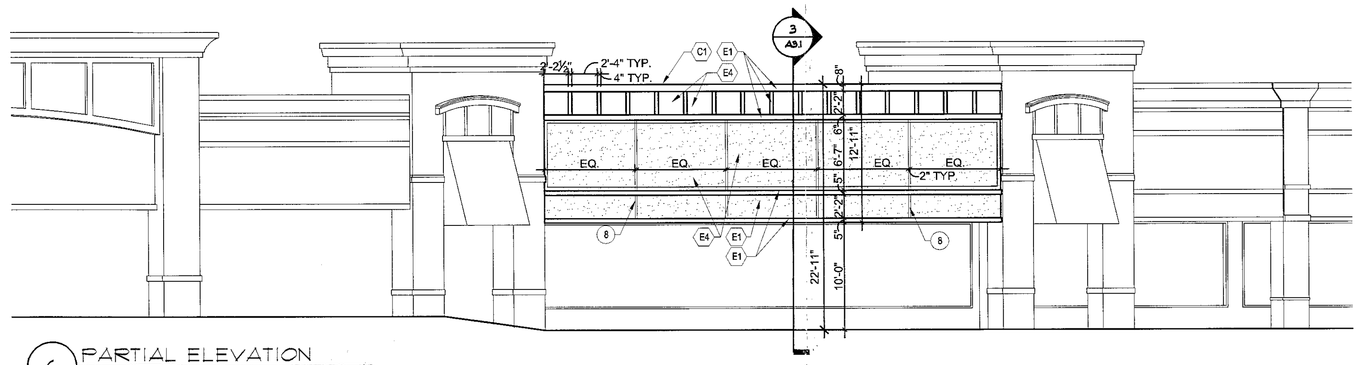

6 PARTIAL ELEVATION
SCALE: 1/8" = 1'-0"

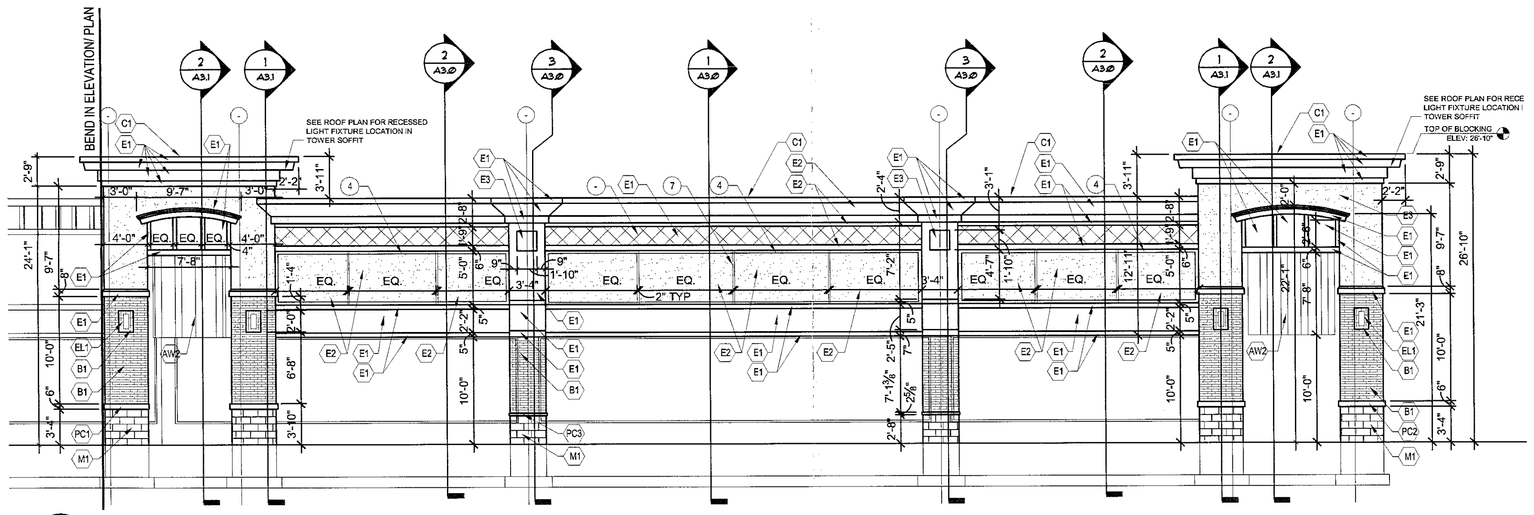

7 PARTIAL ELEVATION
SCALE: 1/8" = 1'-0"

EXTERIOR FINISH MATERIALS LEGEND

COPING:
- (CI) PREFINISHED METAL COPING, ATAS #28 BONE WHITE
- (C2) PREFINISHED METAL COPING, ATAS #15 RAWHIDE

ALUMINUM STOREFRONT FRAMING:
- (A) ALUMINUM FRAMING : COLOR: CLEAR ANODIZED

GLASS:
- (G) 1" INSULATED GLASS—COLOR CLEAR

EIFS:
- (E1) EIFS COLOR: DRYVIT #310 CHINA WHITE—TEXTURE SANDPEBBLE
- (E2) EIFS COLOR: DRYVIT #113 AMARILLO WHITE—TEXTURE SANDPEBBLE
- (E3) EIFS COLOR: DRYVIT #117 COLONIAL TAN—TEXTURE SANDPEBBLE
- (E4) EIFS COLOR: DRYVIT #110 VAN DYKE—TEXTURE SANDPEBBLE
- (E5) EIFS COLOR: DRYVIT #346 PATCHWOOD—TEXTURE SANDPEBBLE

MASONRY:

CMU:
- (M) 4" SPLIT FACE CMU- PAINTED, SHERWIN WILLIAMS # 6106 KILIM BEIGE
- (M1) 8" SPLIT FACE CMU- PAINTED, SHERWIN WILLIAMS # 6106 KILIM BEIGE
- (P1) EXIST SPLIT FACE CMU-PAINTED, SHERWIN WILLIAMS #6106 KILIM BEIGE
- (P2) EXIST SPLIT FACE CMU-PAINTED, SHERWIN WILLIAMS #7008 ALABASTER
- (P3) EXIST SPLIT FACE CMU-PAINTED, SHERWIN WILLIAMS #6002 SANDBANK

BRICK (B) MODULAR BRICK- OXFORD BLEND BY REDMOND

PRE-CAST
- (PC1) PRE-CAST #1- STANDARD GRAY
- (PC2) PRE-CAST #2- STANDARD GRAY
- (PC3) PRE-CAST #3- STANDARD GRAY

FABRIC AWNING
- (AW1) FABRIC AWNING- SUNBRELLA #4647 PERSIAN TWEED
  * PROVIDE PLYWOOD SUBSTRATE AT ALL AWNING LOCATIONS
- (AW2) FABRIC AWNING- SUNBRELA #4679 OCEAN BLUE
  * PROVIDE PLYWOOD SUBSTRATE AT ALL AWNING LOCATIONS

EXTERIOR LIGHT FIXTURE:
- (EL) EVERGREEN LIGHTING- HAMPSHIRE #HS227B 2-27 BX H-19, W-11, D-6 COLOR SATIN ALUMINUM

COLUMN COVER:
- (CC) EDON- STRAIGHT SHAFT COLUMN COVER - MODIFIED LENGTH: EC110F WHITE- 8'-4" FINISHED HEIGHT

GENERAL NOTES:

1. CONTRACTOR SHALL SUBMIT SAMPLES OF ALL FINISH MATERIALS TO ARCHITECT'S OFFICE FOR APPROVALS, PRIOR TO CONSTRUCTION.
2. WITH OWNER'S APPROVAL, CONTRACTOR MAY SUBMIT TO ARCHITECT, ALTERNATE MANUFACTURER FINISH PRODUCTS FOR SUBMITTAL APPROVAL. OWNER/ARCHITECT RESERVE THE RIGHT TO REJECT ANY OR ALL ALTERNATES.
3. CONTRACTOR TO COORDINATE WITH ARCHITECT'S OFFICE AND LANDLORD, COLOR AND FINISH MATERIALS SPECIFICATIONS AND THEIR INTENDED LOCATIONS, PRIOR TO INSTALLATION AND CONSTRUCTION.
4. LINE INDICATES SIGNBAND AREA.
5. LINE INDICATED CONTROL JOINT.
6. LINE OF FOUNDATION
7. VERT. GROOVE- 2" SEE DETAIL '8/A2.0'
8. HORIZ. GROOVE -V SEE DETAIL '9/A2.0'
9. HORIZ. GROOVE- 2" SEE DETAIL '10/A2.0'
10. LINE OF ROOF

INCHES
Town of Bethlehem, NY

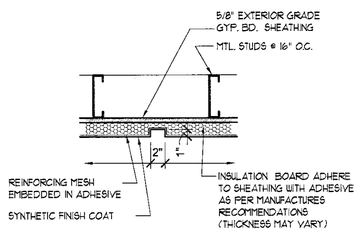

8 VERTICAL GROOVE DETAIL
SCALE: 1"=1'-0"

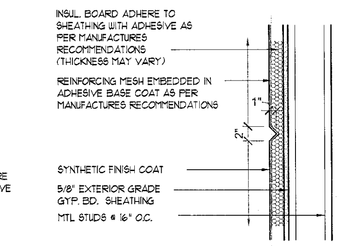

9 HORIZONTAL V-GROOVE DETAIL
SCALE: 1"=1'-0"

10 HORIZONTAL GROOVE DETAIL
SCALE: 1"=1'-0"

SITE KEY MAP

SCALE: N.T.S.

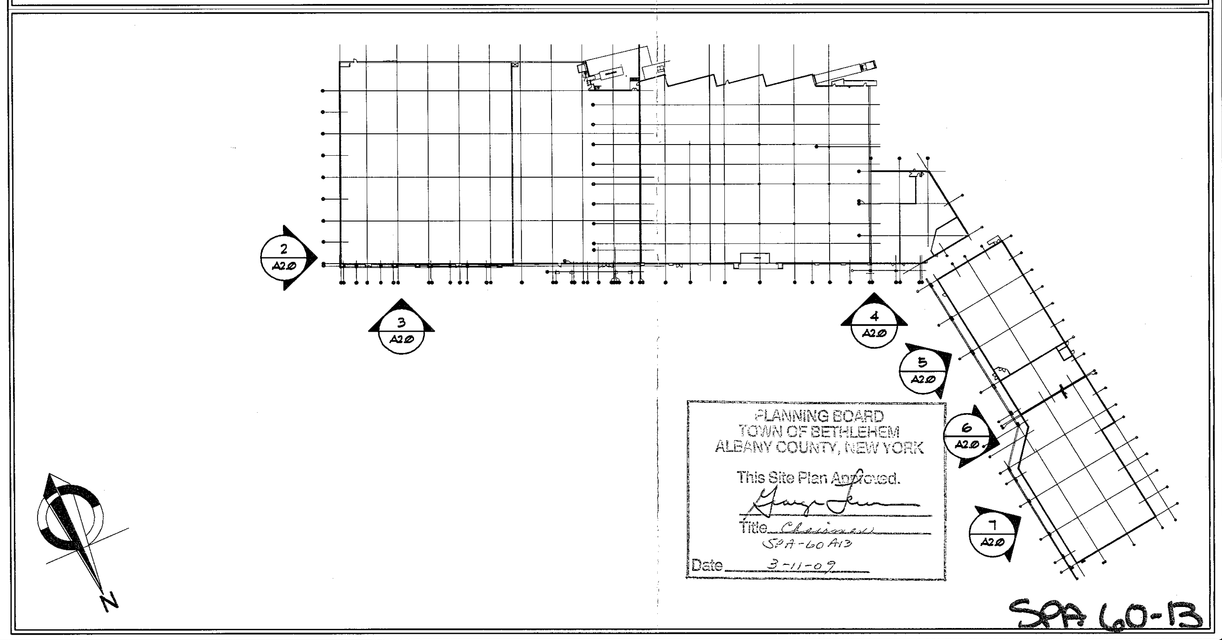

Special Information:

THIS DRAWING PREPARED FOR TENANT IMPROVEMENTS TO AN EXISTING BUILDING OR BUILDING CONSTRUCTED BY OTHERS

IT IS UNDERSTOOD THAT ANY WARRANTY INFORMATION CONCERNING EQUIPMENT INSTALLED MUST BE FORWARDED TO THE OWNER AND THAT ANY AND ALL CONTRACTORS SHALL GUARANTEE THEIR WORK FOR A PERIOD OF ONE YEAR FROM THE DATE OF OWNERS ACCEPTANCE.

NOTICE

UNAUTHORIZED ALTERATIONS OF THIS DOCUMENT ARE IN VIOLATION OF SECTION #7209 OF THE STATE EDUCATION LAW.

Drawing Revisions:

No.	DATE	BY	REMARKS
.	2/11/09	RB	RELEASED FOR PERMIT & BID ONLY

Property No: 4005-FACADE

Status: CD

Area: XXX SF

Property: 388-392 FEURA BUSH ROAD GLENMONT, NEW YORK

Tenant: FACADE RENOVATION

Title: BUILDING ELEVATIONS

James A. Rumsey
ARCHITECT

BENDERSON DEVELOPMENT COMPANY, LLC.
570 Delaware Ave. Buffalo, N.Y. 14202
(716) 886-0211

Drawn By: RB

Checked By: JM

Date: FEB 11, 2009

Drawing No. A2.0