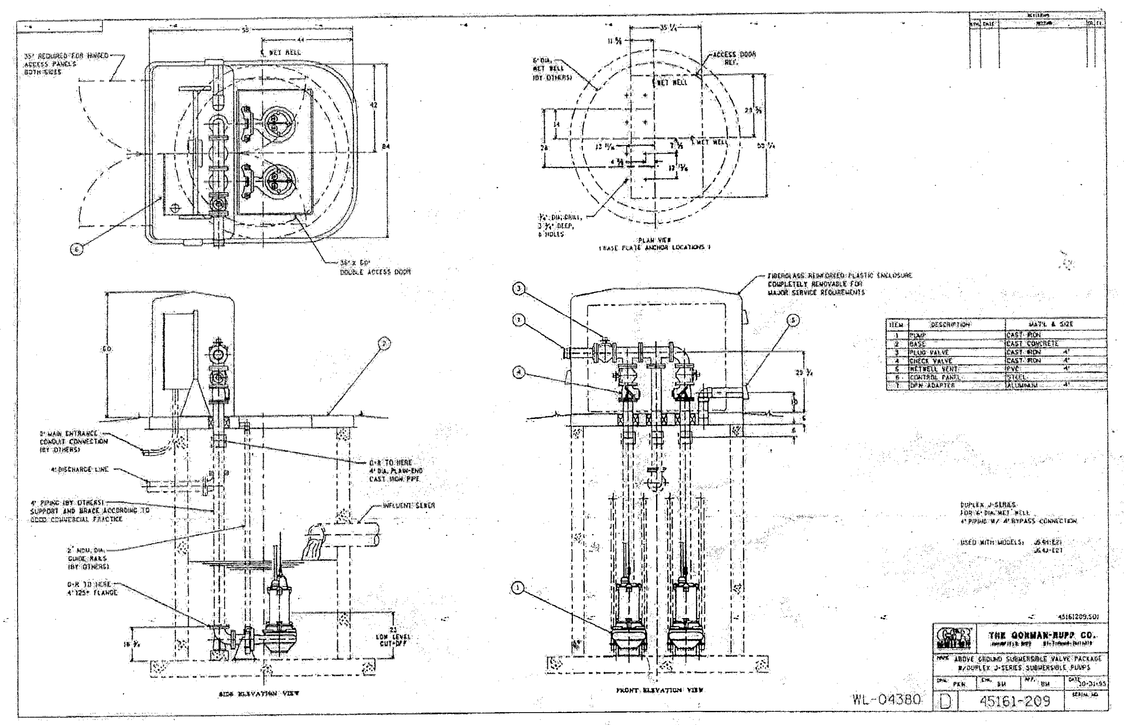

Specification Data	Solids Handling Vortex	Sec. 138	PAGE 60 JUNE 1996

CED

GORMAN-RUPP PUMPS

Certified in Canada

Submersible Pump

Electric Motor Driven

Model JSV3C60–E2.7

Size 3"

FM APPROVED
X-PROOF MOTORS FOR CLASS 1, DIV. 1, GROUPS C&D LOCATIONS
(See Note for Ordering FM).

PUMP SPECIFICATIONS
Casing: Gray Iron No. 30.
Impeller: Winglet Vane Vortex, Ductile Iron No. 60-55-06. Handles 3.15" (80 mm) Diameter Spherical Solids.
Seal Housing: Gray Iron No. 30.
Lower Bearing Bracket: Gray Iron No. 30.
Motor Housing: Gray Iron No. 30.
Motor Shaft: Stainless Steel No. 329.
Bearings: Ball Type, Permanently Lubricated.
O-Rings: Nitrile Rubber.
Hardware-External Wetted: Stainless Steel No. 304.
External Surface Protection: Black Epoxy Paint.
Standard Equipment: Slide Rail Guide Shoe w/Neoprene Seal, Hoisting Bail.
Optional Equipment: 90° Baseplate Elbow, Pump Control Panel, Slide Rail Installation Kit.

Note: When Ordering FM Approved Model, Specify "X" Instead of "E" Following Hyphen in Model Number.

U.S. PATENT
4192604
4676718
4324531

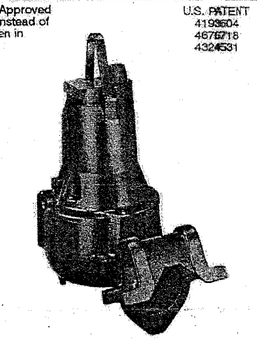

MOTOR/CABLE SPECIFICATIONS
Motor: 2.7 H.P., **60 Hertz, 1750 R.P.M.,** Air Filled Enclosure, Squirrel Cage, Induction Start, G-R Frame No. 1, Class F Insulation Rated 311°F (155°C), 104°F (40°C) Ambient Plus, 239°F (115°C) Temperature Rise. Max. Submergence Depth 65 Feet (20 Meters).
***230, 460 or 575 Volt Three Phase,** 9.0/4.5/3.6 Full Load Amps, NEMA Code H, 1.15 Service Factor.
230 Volt Single Phase, 11.9 Full Load Amps, NEMA Code E, 1.10 Service Factor.
Std. Features: Moisture Sensor Switch, Thermal Protection Switches, Across-the-Line Motor Wiring Connection.

†Power/Control Cable: Neoprene Jacket, Single Cable, 16 AWG., 7 Wire Conductors (2 Conductors Used for Moisture and Thermal Protection).
** 25 Feet (8 Meters) Provided Standard.

Maximum Temperature of Liquid Pumped: 104°F (40°C).
* Specify Voltage Required at Time of Order. (Dual Voltage For 230/460 Three Phase Motors).
** For Different Lengths, Specify at Time of Order.
†See Accessories Section for CSA-Approved Cable Specifications. Specify CSA When Ordering.

WARNING!
Use only X-proof model for application in Class I, Division I, Groups C and D X-proof environments, or where trace amounts of volatile, flammable liquids may be present.

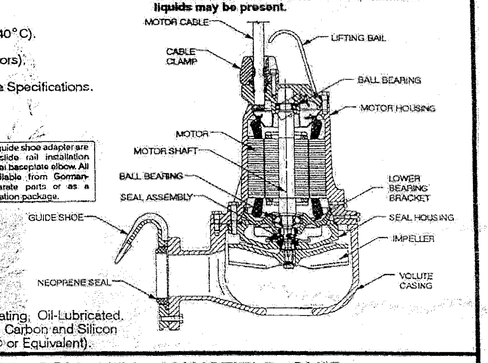

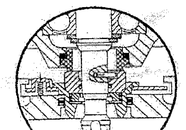

The pump and guide shoe adapter are designed for slide rail installation using an optional baseplate elbow. All items are available from Gorman-Rupp as separate parts or as a complete lift station package.

SEAL SPECIFICATIONS
Mechanical Double Seal, Self-Aligning, Double Floating, Oil-Lubricated. Lower Faces are Silicon Carbide, Upper Faces are Carbon and Silicon Carbide, Fluorocarbon Elastomers (DuPont Viton® or Equivalent).

THE GORMAN-RUPP COMPANY • MANSFIELD, OHIO
GORMAN-RUPP OF CANADA LIMITED • ST. THOMAS, ONTARIO, CANADA
Specifications Subject to Change Without Notice
Printed in U.S.A.

© Copyright by the Gorman-Rupp Company 1996

Specification Data	OVERALL DIMENSIONS and APPROXIMATE WEIGHTS	NET WT: (pump only) 127 LBS. [58 KG.] (pump w/std. cable) 132 LBS. [60 KG.] SHIPPING WT: 146 LBS. [66 KG.] CRATE SIZE: 3.6 CU. FT. [0.10 CU. M.]
SECTION 138, PAGE 60		

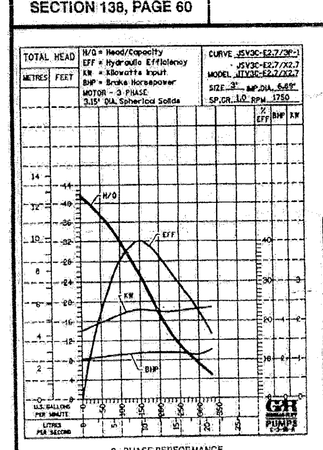

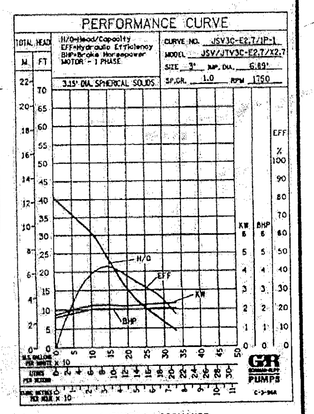

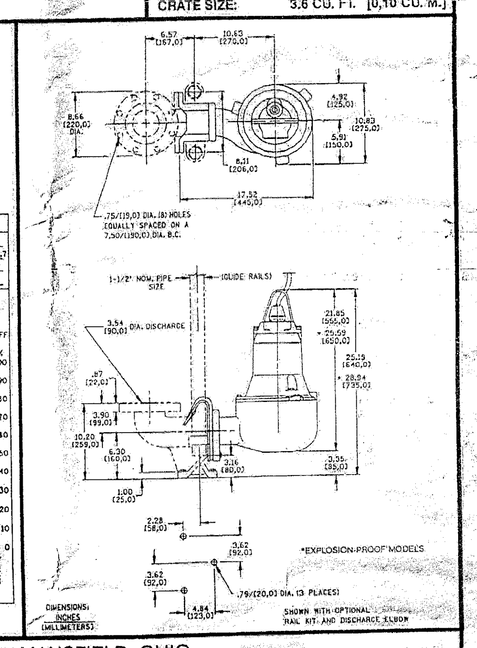

THE GORMAN-RUPP COMPANY • MANSFIELD, OHIO
GORMAN- RUPP OF CANADA LIMITED • ST. THOMAS, ONTARIO, CANADA
Specifications Subject to Change Without Notice
Printed in U.S.A.

© Copyright by the Gorman-Rupp Company 1996

Gorman Rupp submersible above-ground valve package lift station furnished with duplex JSV3C60-E2.7, J Series submersible pumps, pump guide shoes, base elbows, stainless steel lifting cable, upper guide rail mounting brackets, 26' of power/control cable, individual 4" swing check valves, individual 4" plug valves, thermostatically controlled ventilator fan, fiberglass enclosure with two sets of hinged access doors, 4" customer connection piping extending 6" below station slab, duplex aluminum access lid rated for 300 pounds per square foot loading, integral static wet well vent in fiberglass encapsulated concrete base. Also included is station heater, 4" discharge bypass connection, discharge gauges, and station insulation package.

Duplex submersible control panel with motor control/liquid level control mounted within a NEMA 1 stainless steel enclosure, with the following standard features: Heavy duty motor branch circuit breakers, main entrance terminal blocks, full voltage NEMA rated magnetic starters with Class 10 overload protection on all phases, panel corrosion inhibitor, electronic pressure switch (EPS2000), liquid level output with air bubbler level control with simulator, pump start delays, 4-20 mA level signal, two air pumps with selector switch, air flow indicator, air bell, high water alarm circuit with dry contacts, low water alarm circuit with pump shutdown and dry contacts, alarm silence switch, H-O-A selector switch, motor overload resetters, GFI receptacle and pump motor moisture/thermal shutdown with indicator with dry contacts. Alarm light shipped loose also included.

EMERGENCY POWER ALTERNATIVE

THE CONTRACTOR SHALL FIELD INSTALL THE FOLLOWING:

1. A STANDBY POWER RECEPTACLE AND TRANSFER SWITCH TO ACCOMMODATE MUNICIPAL PORTABLE GENERATOR. RECEPTACLE TO BE 4 WIRE/4 POLE 2" HUB, STYLE 1AR1041SS22 (MALE END) - CROUSE HINDS, INC. O.E.

2. TRANSFER SWITCH SHALL BE OF NON-AUTOMATIC TYPE FOR USE IN EMERGENCY AND STANDBY SYSTEMS IN ACCORDANCE WITH 517,700, 701 AND 702 OF THE NATIONAL ELECTRIC CODE AND CONFORM TO THE REQUIREMENT S OF NEMA STANDARDS ICS 2-447 AND UL 1008.

SANITARY LIFT STATION FLOAT ELEVATIONS

INVERT IN =	165.36
PUMP OFF =	160.86 (-4.5')
PUMP 1 ON =	164.36 (-1.0')
PUMP 2 ON =	164.86 (-0.5')
HIGH WATER ALARM =	165.11 (-0.25')
LOW WATER ALARM =	160.36 (-5.0')

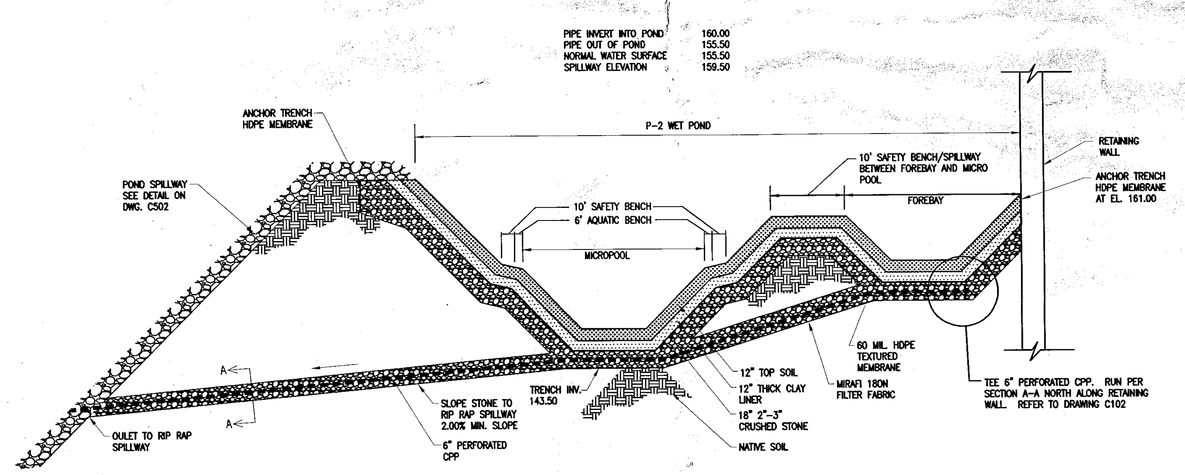

P-2 WETPOND CROSS SECTION

NO SCALE

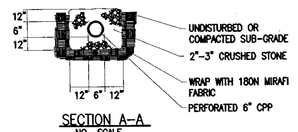

SECTION A-A
NO SCALE

INCHES
Town of Bethlehem, NY

NOT APPROVED:
THIS PLAN HAS NOT RECEIVED FINAL APPROVAL OF ALL REVIEWING AGENCIES. THIS PLAN IS SUBJECT TO REVISIONS UNTIL ALL APPROVALS ARE OBTAINED AND SHOULD NOT BE USED FOR CONSTRUCTION PURPOSES.

BETHLEHEM CENTER II

241 NYS Route 9W
BETHLEHEM, NY

NIGRO COMPANIES

20 CORPORATE WOODS BLVD.
ALBANY, NEW YORK 12211

BERGMANN associates
Engineers / Architects / Surveyors

200 First Federal Plaza
28 East Main Street, Rochester, New York 14614
585.232.5135 / 585.232.4652 fax

REVISIONS

NO.	DATE	DESCRIPTION	REV.	CK'D
1	3/28/05	REV. PER TOWN ENG. COMMENTS 12/10/04	DGC	PVG
2	08/01/05	REV. PER TOWN ENG. COMMENTS 06/30/05	DGC	PVG
3	09/26/05	REDATE ONLY	DGC	PVG
4	10/14/05	MISC. REVISIONS	DGC	PVG
5	2/01/06	REDATE ONLY	DGC	PVG

NOTE:
Unauthorized alteration or addition to this drawing is a violation of the New York State Education Law Article 145, Section 7209.

PLANNING BOARD
TOWN OF BETHLEHEM
ALBANY COUNTY, NEW YORK
This Site Plan Approved.
Title CHAIRMAN
Date 5/9/06

MISCELLANEOUS DETAILS

RECEIVED
MAY 8 2006
PLANNING BOARD
TOWN OF BETHLEHEM

STATE OF NEW YORK · PETRO V. GIOVENDO · LICENSED PROFESSIONAL ENGINEER

4/7/06
PETRO V. GIOVENDO, NYS LIC. #075957

Project Manager:	P. Giovenco, PE
Designed by:	T. Liddell
Drawn by:	T. Liddell
Checked by:	P. Giovenco, PE
Date Issued:	APRIL 19, 2004
Scale:	AS NOTED
Project Number:	6002.00
File Name:	I:\NIGRO\6092\6092MDC3.DWG
Drawing Number:	C503

Planning Approval
PrintorITE_SPA118A