Planning Approval
PriortoHTE_SPA130

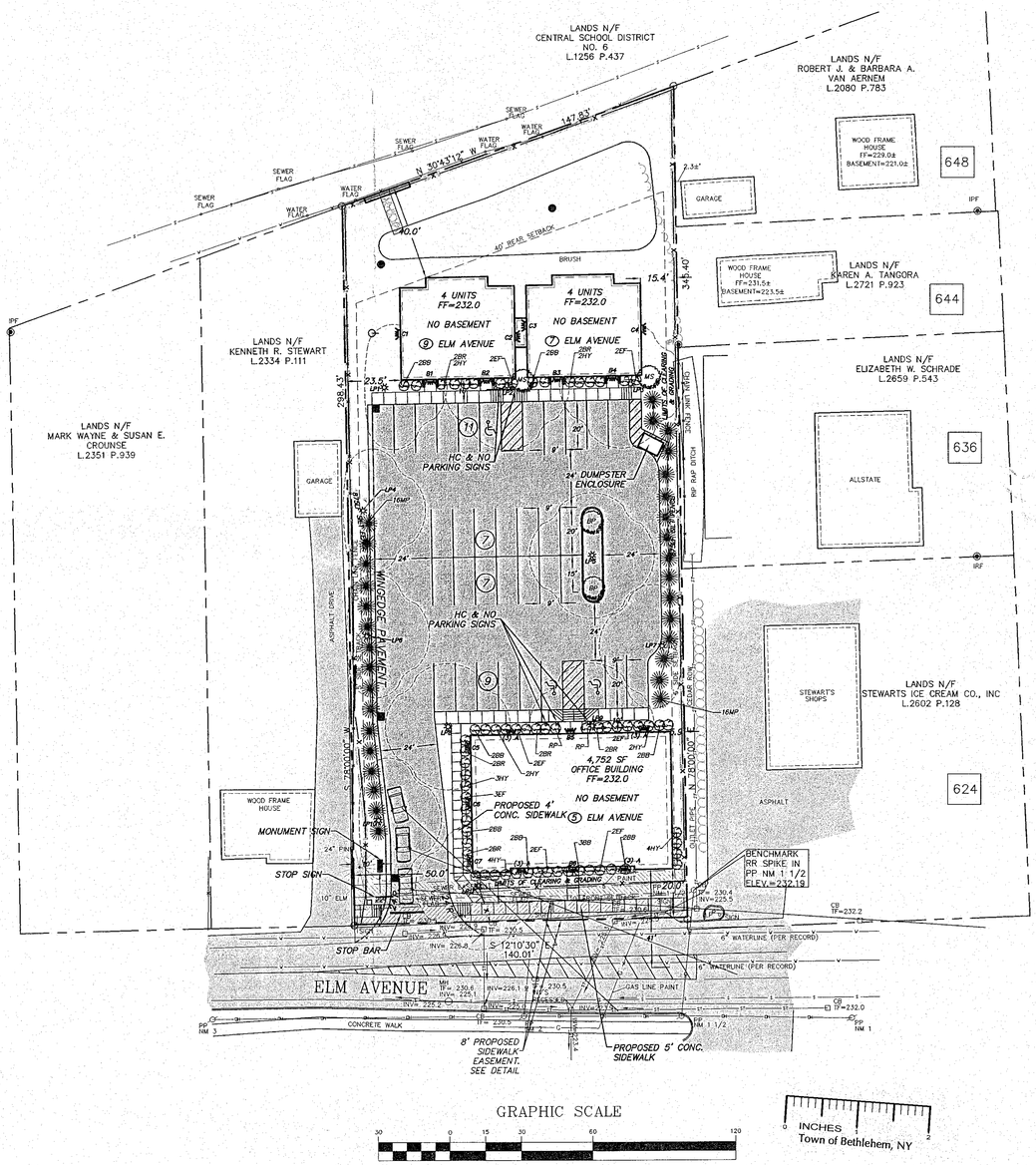


## PLANTING SCHEDULE

| KEY | SCIENTIFIC NAME | COMMON NAME | QUANT. | SIZE | COMMENTS |
|---|---|---|---|---|---|
| RP | RHODODENDRON 'PJM' | PJM RHODODENDRON | 2 | 24" TO 30" S | B & B |
| BB | EUONYMUS ALATUS | BURNING BUSH | 17 | 24" TO 30" S | B & B |
| EF | EUONYMUS FORTUNE I | EMERALD AND GOLD EUONYMUS | 15 | 18" TO 24" S | CONTAINER |
| BR | JUNIPER HORIZONTALIS | BLUE RUG JUNIPER | 12 | 18" TO 24" S | B & B |
| HY | TAXUS MEDIA HICKS | HICKS YEW | 19 | 24" TO 30" S | B & B |
| MS | MALUS SNOWDRIFT | CRAB APPLE | 4 | 2" TO 2.5" CAL | B & B |
| BP | PYRUS CALLERYANA | BRADFORD PEAR | 2 | 2" TO 2.5" C | B & B |
| MP | EVERGREENS – MIX OF PINES & SPRUCES | | 32 | 5' TO 6' HT | B & B |

70W HPS COOPER LIGHTING UTD DAYFORM TRADITIONAIRE

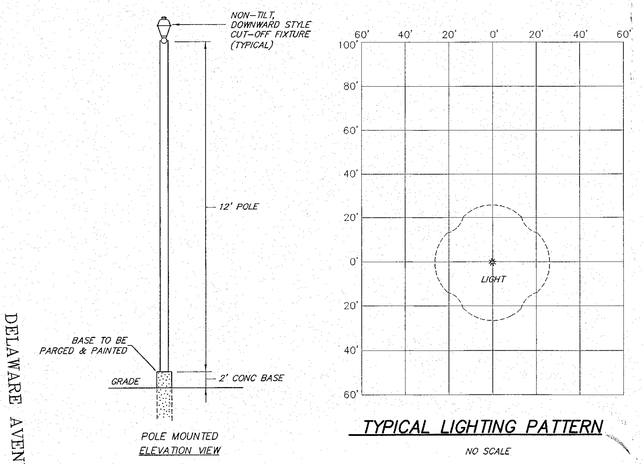


## TYPICAL LIGHTING PATTERN

NO SCALE

INSTALL 12' HIGH STEEL LIGHT POLE ON 2' TALL CONCRETE BASE. WIRE ALL LIGHTS THRU THE SAME TIME CLOCK WITH (1) SET OF TRIPPERS APPLY A HAND RUBBED FINISH ON CONCRETE BASE. ALL EXTERIOR LIGHTING TO BE SYNCHRONIZED.

USE BACKSHILED ON LP # 1,6,7 & 10

## LIGHTING DETAIL

NO SCALE

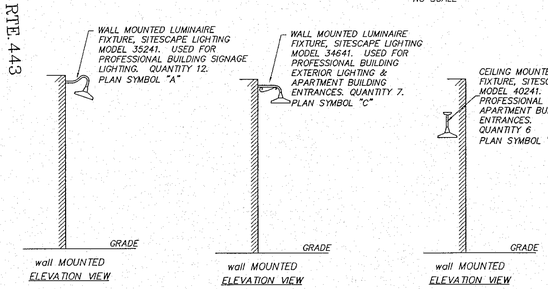


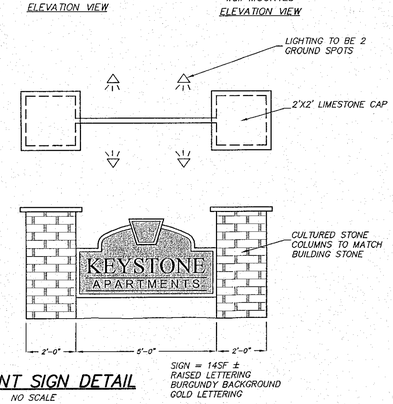


## MONUMENT SIGN DETAIL

NO SCALE

SIGN = 14SF ±
RAISED LETTERING
BURGOUNDY BACKGROUND
GOLD LETTERING

NOTES:

1. BASE MAPPING PREPARED BY ABD ENGINEERS & SURVEYORS FROM A FEBRUARY 2006 FIELD SURVEY.
2. THE PLANS SHOW SOME KNOWN SUBSURFACE STRUCTURES, ABOVE– GROUND STRUCTURES AND/OR UTILITIES BELIEVED TO EXIST IN THE WORKING AREA, EXACT LOCATION OF WHICH MAY VARY FROM THE LOCATIONS INDICATED. IN PARTICULAR, THE CONTRACTOR IS WARNED THAT THE EXACT OR EVEN APPROXIMATE LOCATION OF SUCH PIPE LINES, SUBSURFACE STRUCTURES AND/OR UTILITIES IN THE AREA MAY BE SHOWN OR MAY NOT BE SHOWN, AND IT SHALL BE HIS RESPONSIBILITY TO PROCEED WITH GREAT CARE IN EXECUTING ANY WORK. 48 HOURS BEFORE YOU DIG, DRILL OR BLAST, CALL U.F.P.O. 1–800–962–7962.
3. RETAINING WALL MUST BE INSPECTED AND CERTIFIED BY DEVELOPERS ENGINEER PRIOR TO ISSUANCE OF A CERTIFICATE OF OCCUPANCY FOR APARTMENTS.
4. STORMWATER AREA MUST BE INSPECTED AND CERTIFIED BY DEVELOPERS ENGINEER PRIOR TO ISSUANCE OF A CERTIFICATE OF OCCUPANCY.
5. OFFICE BUILDING TO HAVE AN ACDOH/TOWN APPROVED BACKFLOW PREVENTION DEIVICE.
6. CONTRACTOR TO COORDINATE THE RELOCATION OF THE TRAFFIC CONTROL SIGNS ALONG THE PROPERTY FRONTAGE WITH THE ALBANY COUNTY DPW.

MAP REFERENCE:
MAP ENTITLED "MAP OF SURVEY St. No. 636 DELAWARE AVENUE, – N.Y.S. Rt. 443 aka DELAWARE TURNPIKE, TOWN OF BETHLEHEM", PREPARED BY PAUL E. HITE DATED NOVEMBER 30, 2000.

| REQUIRED: | | PROVIDED: |
|---|---|---|
| ZONING: | HAMLET | |
| SETBACKS: | | |
| FRONT: | 10' (35' FROM ROAD CENTERLINE) | 20.0' (41'± TO CENTERLINE) |
| SIDE: | 5' | 50.0' & 5.9', 23.5' & 15.4' |
| REAR: | 40' | 40.0' |
| HEIGHT: | 35' | -- |
| LOT WIDTH: | 50' | 140.01' |
| LOT FRONTAGE: | 40' | 140.01' |
| LOT AREA: | 10,000 SF FOR MIXED USE | 45,025± SF (1.03± ACRES) |
| LOT DEPTH: | 100' | 298.43' |

| PARKING REQUIREMENTS | |
|---|---|
| MULTI FAMILY DWELLING = 1.5 SPACES/UNIT = 12<br>OFFICE = 1 SPACE/400 SF = 12<br>TOTAL REQUIRED = 24 SPACES | 33 SPACES |

| COVERAGE STATISTICS | | | TOTAL | |
|---|---|---|---|---|
| BUILDINGS: | – | 75% MAX. | 8,686 SF | 19.3% |
| GREEN SPACE: | – | | 18,828 SF | 41.8% |
| PAVEMENT: | – | | 17,511 SF | 38.9% |
| | | TOTAL | 45,025 SF (1.03 ACRES) | 100% |

OWNER/APPLICANT:
KEYSTONE BUILDERS, INC.
388 KENWOOD AVENUE
DELMAR, NY 12054

TAX MAP #: 85.18–4–19

PLANNING BOARD
TOWN OF BETHLEHEM
ALBANY COUNTY, NEW YORK
This Site Plan Approved.
Chairman
Title
SPR130
Date 6/6/07

| NO. | REVISION | BY | DATE |
|---|---|---|---|
| 4. | TOWN COMMENTS | JKL | 4/27/07 |
| 3. | TOWN COMMENTS | JKL | 10/19/06 |
| 2. | TOWN COMMENTS | JKL | 9/14/06 |
| 1. | TOWN COMMENTS | JKL | 7/26/06 |

ALTERATION OF THIS DOCUMENT EXCEPT BY A LICENSED PROFESSIONAL ENGINEER IS ILLEGAL

JOSEPH J. BIANCHINE, P.E.
N.Y.S. LICENSE NO. 50226

# LAYOUT, LANDSCAPING & LIGHTING PLAN
# LANDS N/F KOMAR
# 7 ELM AVENUE

TOWN OF BETHLEHEM | COUNTY OF ALBANY
STATE OF NEW YORK


ABD ENGINEERS & SURVEYORS
411 Union Street Schenectady, N.Y. 12305
518–377–0315 Fax.518–377–0379


| DATE: | SCALE: | DWG. | SHEET OF |
|---|---|---|---|
| MAY 16, 2006 | 1" = 30' | 3427A–S | 3 5 |