Planning Approval
10-00100008_SPA175

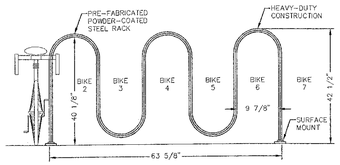

BIKE RACK
NOT TO SCALE

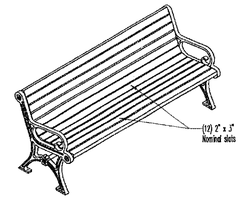

TYPICAL PARK BENCH (6'-8' LENGTH)

OUTDOOR BENCH
NOT TO SCALE

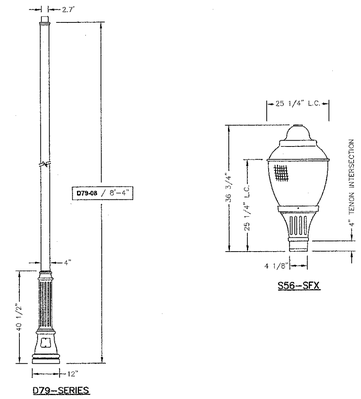

SITE LIGHTING - LUMEC ACORN STYLE
NOT TO SCALE

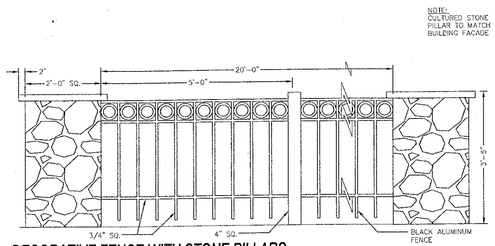

DECORATIVE FENCE WITH STONE PILLARS
NOT TO SCALE

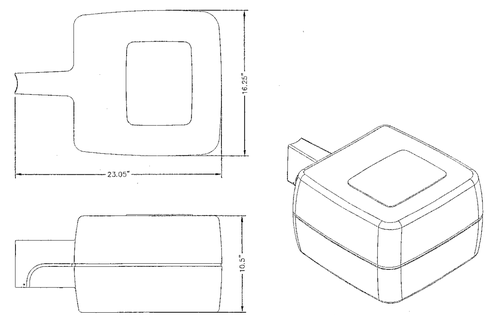

SITE LIGHTING - EMCO AVV STYLE
NOT TO SCALE

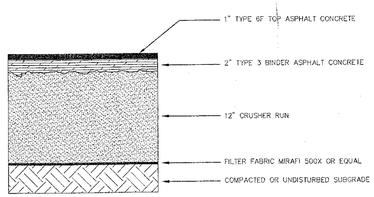

PARKING PAVEMENT SECTION

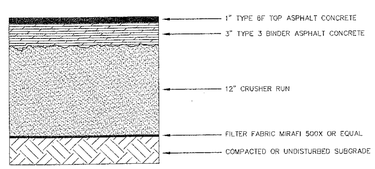

ROAD PAVEMENT SECTION

TYPICAL PAVEMENT SECTIONS
NOT TO SCALE

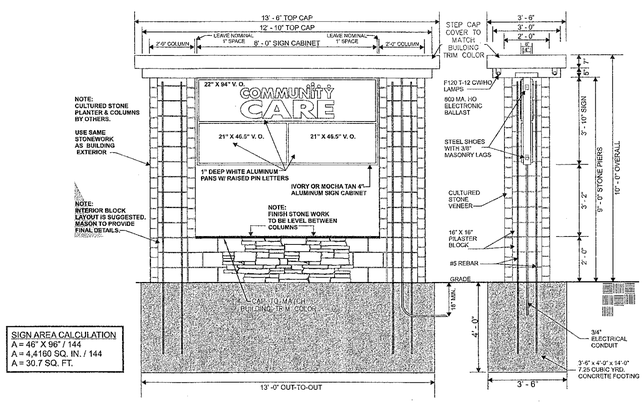

SIGN AREA CALCULATION
A = 46" X 96" / 144
A = 4.4160 SQ. IN. / 144
A = 30.7 SQ. FT.

NOTES:
1. SUBCONTRACTOR PRIMARY CIRCUIT IN VICINITY OF SIGN BY OTHERS.
2. FINAL PRIMARY HOOKUP BY SIGN INSTALLER WHERE ALLOWED BY LOCAL CODES.
3. SIGN SHALL BE U. L. LISTED, IF REQUIRED.
4. ALL WIRING TO COMPLY WITH N.E.C.
5. REINFORCING STEEL ASTM A615 GR.40.
6. STRUCTURAL STEEL ASTM A-36.
7. ALL WELDS CONFORM TO A.W.S STANDARDS.
8. ELECTRICAL LOAD: 2.0 AMPS. @120 VOLTS. 1/1.75 AMP/120 VOLT CIRCUIT REQUIRED.

46" X 96", 30.7 SQ. FT., DOUBLE-FACED EXTERNALLY ILLUMINATED MONUMENT SIGN. SIGN CABINET TO BE FACTORY ENAMELED IVORY OR MOCHA TAN ALUMINUM W/ WHITE ALUMINUM STEPPED TOP CAP. 1" DEEP TENANT FACE PANS ARE WHITE ALUMINUM WITH .5" RAISED PIN LETTERS LOGO GRAPHICS PER TENANT SPECIFICATIONS. EXTERNAL ILLUMINATION TO BE HIGH OUTPUT FLOURESCENT LAMPS & 600 MA. HO ELECTRONIC BALLAST. ELECTRICAL WIRING TO MEET U. L. SPECIFICATIONS. SIGN TO BE INSTALLED BETWEEN CULTURED STONE COLUMNS WITH 3/8" MASONRY SCREWS.

MASONRY FOOTING, PILASTERS AND PLANTER WITH CULTURED STONE VENEER TO BE SUPPLIED BY OTHERS.

NOTE: ADEQUATE 120 VOLT, 20 AMP., PRIMARY ELECTRICAL POWER TO SIGN LOCATION PROVIDED BY OTHERS.

EXTERNALLY ILLUMINATED MONUMENT DETAIL
NOT TO SCALE

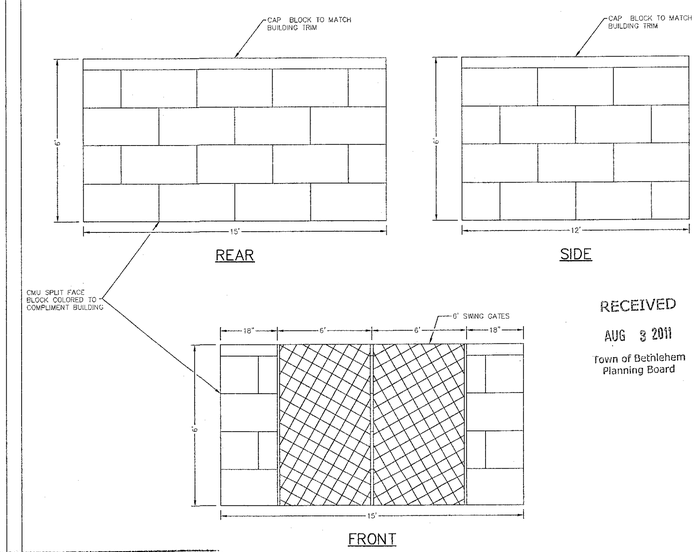

RECEIVED
AUG 3 2011
Town of Bethlehem Planning Board

PLANNING BOARD
TOWN OF BETHLEHEM
ALBANY COUNTY, NEW YORK
This Site Plan Approved.
Title CHAIRMAN
August 4, 2011 SPA175

DUMPSTER ENCLOSURE DETAIL
NOT TO SCALE

INCHES
Town of Bethlehem, NY

infinigy engineering
11 Herbert Drive
Latham, New York 12110
(518) 690-0790

STATE OF NEW YORK · MICHAEL B. TUCKER · 072195-1 · PROFESSIONAL ENGINEER

UNAUTHORIZED ALTERATION OR ADDITION TO THIS DOCUMENT IS A VIOLATION OF APPLICABLE STATE AND/OR LOCAL LAWS

No.	Submittal / Revision	App'd	Date
3	Project Title Change	MBT	8/01/11
2	Final Submission	MBT	5/25/11
1	ADD DETAILS	MBT	4/22/11

Drawn: TAR Date: 2/11
Designed: TAR Date: 2/11
Checked: MBT Date: 2/11

Project Number
182-094

Project Title
Delaware Avenue Health Park

Delaware & Elsmere Ave's
Bethlehem, NY

Prepared For
Patroon Development LLC

Drawing Title
Site Details

Drawing Scale:
1" = 30'
Date:
8/01/2011

Issued For
SITE PLAN REVIEW

Drawing Number
C-15

File: M:\TOW-BURKE\DELAWARE AVE\10_DRAWINGS\1.2_DRAWINGS\1.2.1_DESIGN LAYOUTS\1.2.1.3_PRELIMINARY\C15_DETAILS.DWG Saved: 5/25/2011 4:10:28 PM Plotted: 8/2/2011 9:36:40 AM User: Ted Renshaw