BETHLEHEM STANDARD NOTES FOR ALL DRIVEWAYS OVER 100 FEET LONG:

1. DRIVEWAY WIDTH IS 11 FEET MINIMUM.
2. ALL TURNS IN THE DRIVEWAY TO HAVE RADII TO ACCOMMODATE TURNING RADIUS OF EMERGENCY VEHICLES, OR WIDENED WIDTHS TO ACCOMMODATE SUCH VEHICLES.
3. DRIVEWAY GRADES NOT TO EXCEED 10%.
4. DRIVEWAY CONSTRUCTION IS IN ACCORDANCE WITH TOWN HIGHWAY SPECIFICATIONS WITH THE ASPHALT SURFACE OPTIONAL. THE DRIVEWAY SHALL BE PAVED FROM THE EDGE OF EXISTING ROADWAY PAVEMENT TO THE LIMITS OF THE PUBLIC ROAD RIGHT-OF-WAY. CONSTRUCTION TO ACCOMMODATE EMERGENCY VEHICLE LOADINGS FOR THE SOIL CONDITIONS PRESENT.
5. ADEQUATELY DESIGNED DRIVEWAY CULVERTS TO BE INSTALLED IN ALL DRIVEWAYS TO ACCOMMODATE LOCAL DRAINAGE PATTERNS.
6. A PLACARD IDENTIFYING THE HOUSE NUMBER OF THE RESIDENCE IN FOUR-INCH MINIMUM SIZE NUMERALS TO BE INSTALLED ADJACENT TO THE DRIVEWAY AT THE PUBLIC ROAD RIGHT-OF-WAY LINE.

PLANT SCHEDULE

BOTANICAL NAME	COMMON NAME	QTY	SIZE	HEIGHT/SPREAD AT MATURITY	SPACING
TREES					
PICEA GLAUCA	WHITE SPRUCE	9	6' HT.	40-60'/15-20'	15-20' O.C.
PINUS STROBUS	WHITE PINE	6	4' HT.	40-60'/15-20'	AS SHOWN

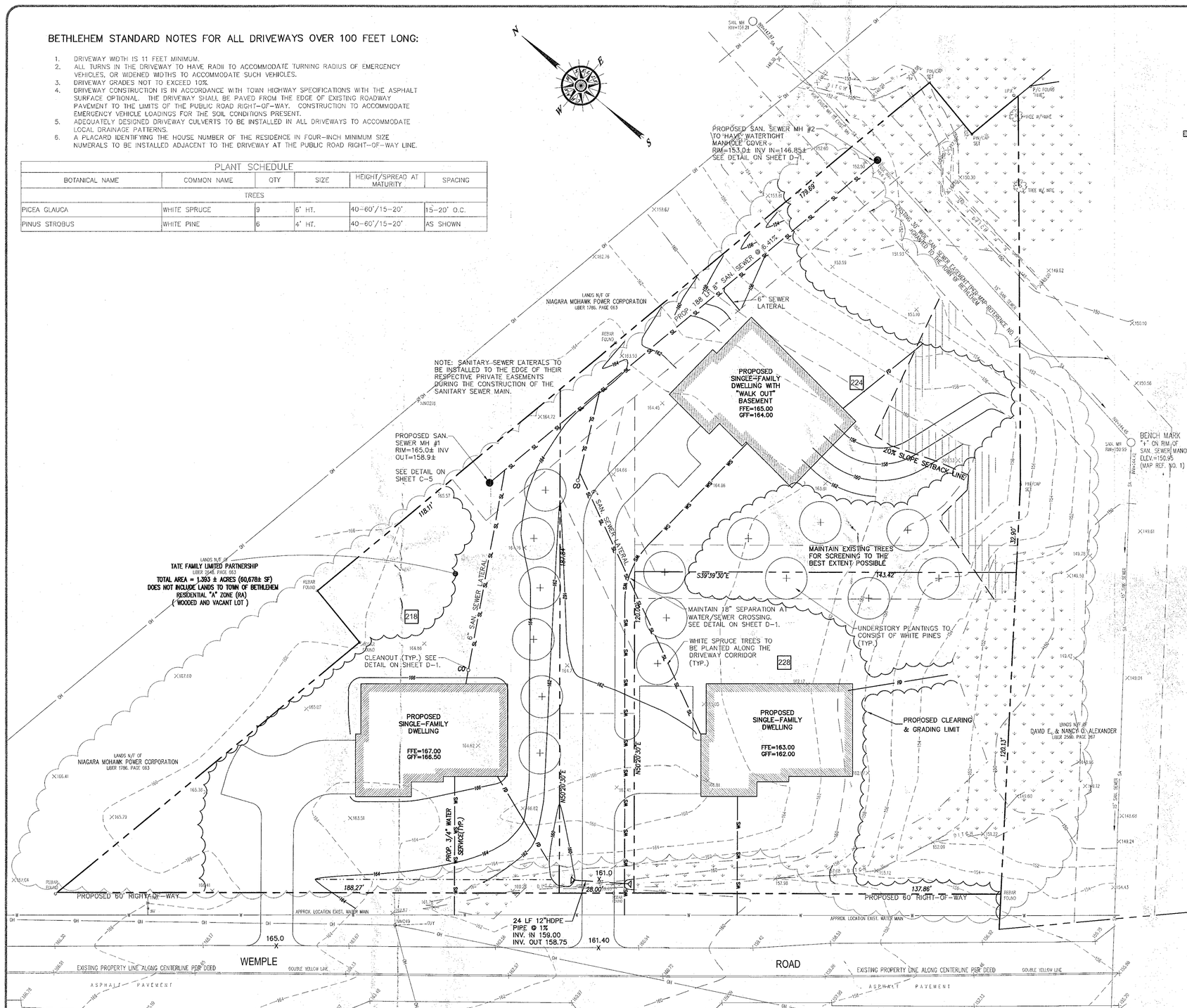

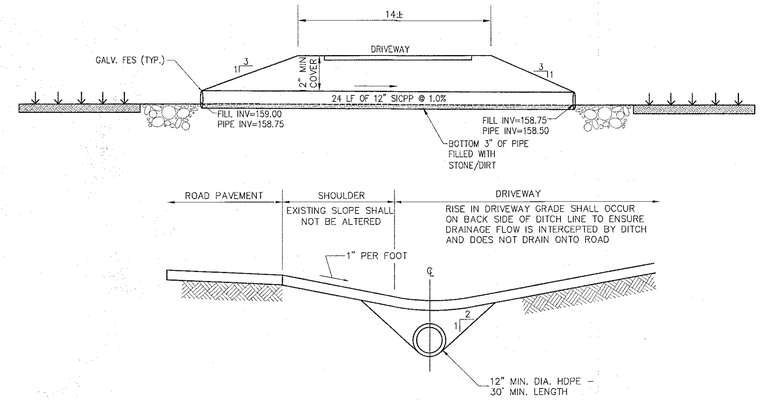

LOT 2 DRIVEWAY CULVERT INSTALLATION

SCALE: NONE

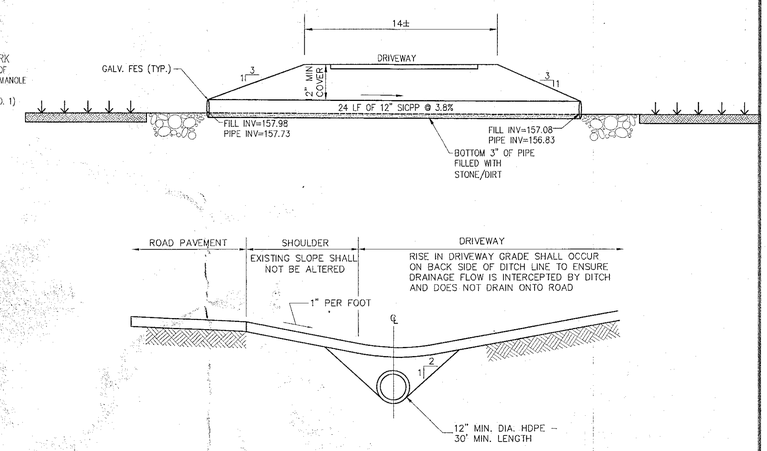

LOT 3 DRIVEWAY CULVERT INSTALLATION

SCALE: NONE

TOWN OF BETHLEHEM PLANNING BOARD

TOWN OF BETHLEHEM, NEW YORK
PLANNING DEPT. ORIGINAL
- SCANNED -
0 1 INCHES 2

PLANNING BOARD
TOWN OF BETHLEHEM
ALBANY COUNTY, NEW YORK
By direction of the Chairman.
These drawings are hereby approved.
See sheet(s) C-3
for date and signature.

ALBANY COUNTY DEPARTMENT OF HEALTH
DIVISION OF ENVIRONMENTAL HEALTH SERVICES.
By direction of the Commissioner of Health, these plans are hereby approved. See first sheet for date and signature.

© COPYRIGHT 2009
WSP SELLS
ALL RIGHTS RESERVED
UNAUTHORIZED
DUPLICATION IS A
VIOLATION OF
APPLICABLE LAWS.

REVISIONS

DATE		BY
3/18/08	UPDATED PER COMMENTS FROM ROBERT LESLIE OF BETHLEHEM (3/17/08)	
12/4/08	UPDATED BORDER TO WSP-SELLS	
12/15/08	ADDED INVERT INFO ON STORM PIPE, UFPO NOTE, CURB STOPS, AND REGRADED AROUND OUTLET.	
2/05/09	ADDED CLARIFICATION TO TOTAL LOT ACREAGE AND FLAG LOT ACREAGE	
4/23/09	ADDED COLUMN TO ZONING REQUIREMENTS CHART, REVISED VALUES AS NECESSARY	
4/27/09	ADDED/REVISED DIMENSIONS BETWEEN PROPERTY LINES AND STRUCTURES	
4/27/09	ADDED/REVISED DIMENSIONS BETWEEN PROPERTY LINES AND STRUCTURES	
7/15/09	ADDED WETLAND BOUNDARIES FROM SURVEY	
4/16/14	REVISED PLANS PER TOWN OF BETHLEHEM COMMENT LETTER 2/11/14 AND 4/8/14	
1/28/15	REVISED PLANS PER TOWN OF BETHLEHEM COMMENT LETTER 5/21/14	
3/18/15	REVISED PLANS PER TOWN OF BETHLEHEM COMMENT LETTER 3/3/15 AND 3/18/15	
4/24/15	REVISED PLANS PER TOWN OF BETHLEHEM PLANNING BOARD COMMENTS	

WSP
Transportation & Infrastructure
1 Columbia Circle ▪ Albany, NY 12203 ▪ 518.452.3545
www.wspsells.com

Alteration of this document, except by a licensed professional engineer, is illegal. Copies of this map not bearing an ink or embossed seal of the original preparer shall not be considered to be a true or valid copy.

STATE OF NEW YORK · CHAS. H. SELLS · LICENSED PROFESSIONAL ENGINEER · LIC. NO. 070
CHAS. H. SELLS

Unauthorized alteration or addition to this map is a violation of section 7209, sub-division 2 of the New York State Education Law.

Only copies from the original of this map bearing an original signature and the embossed seal of the preparer shall be considered to be true and valid copies.

GRADING AND UTILITY PLAN

CROSSROADS SUBDIVISION - SECTION 3

TATE FAMILY LIMITED PARTNERSHIP
WEMPLE ROAD * TOWN OF BETHLEHEM * NEW YORK
TAX MAP ID: 109.00 - 1 - 36

Date: DECEMBER 4, 2008 | Scale: 1"=20' | Cadd: FINAL.DWG

Sheet: C-4