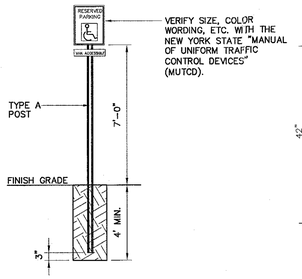


ACCESSIBLE PARKING SIGN
(NOT TO SCALE)

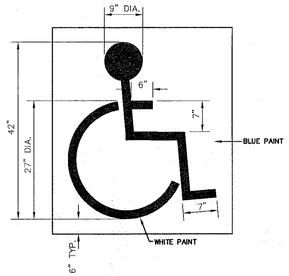


HANDICAP PARKING SPACE PARKING DETAIL
(NOT TO SCALE)

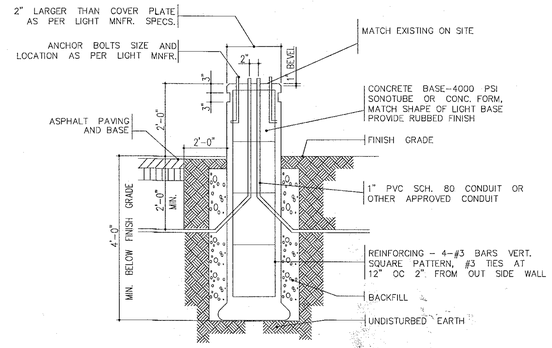


CONCRETE LIGHT POLE BASE DETAIL - LP-2
SCALE: N.T.S.

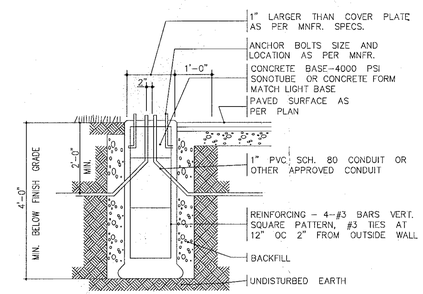


CONCRETE LIGHT POLE BASE DETAIL - LP-1
SCALE: N.T.S.

NOTE: 72 HOURS PRIOR TO ANY CONSTRUCTION ACTIVITIES, THE CONTRACTOR SHALL CONTACT THE DIG SAFELY NEW YORK TO LOCATE ALL UNDERGROUND UTILITIES. 1-800-962-7962

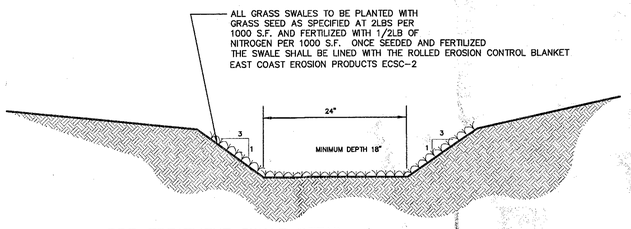


PRE-TREATMENT SWALE DETAIL

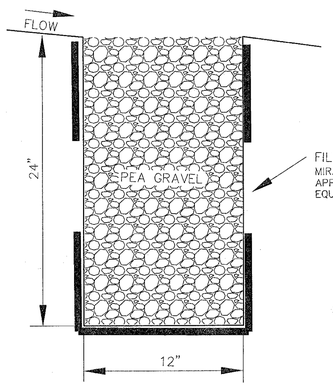


GRAVEL DIAPHRAM DETAIL
SCALE: N.T.S.

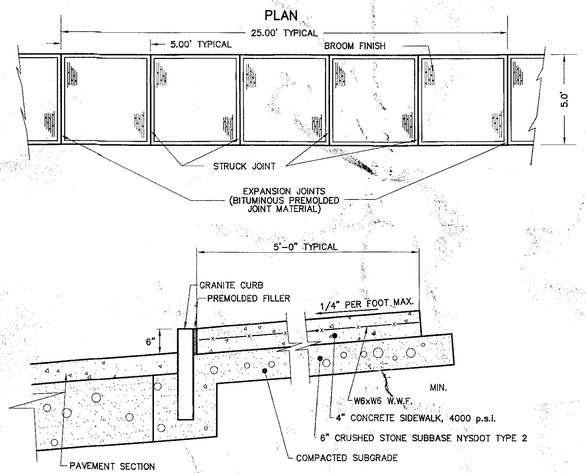


NOTES:
1. SEE SIDEWALK JOINTS DETAIL FOR JOINT SIZE AND SPACING
2. EXPOSED CONCRETE SURFACE TO HAVE LIGHT BROOM FINISH

CONCRETE SIDEWALK DETAIL
N.T.S.

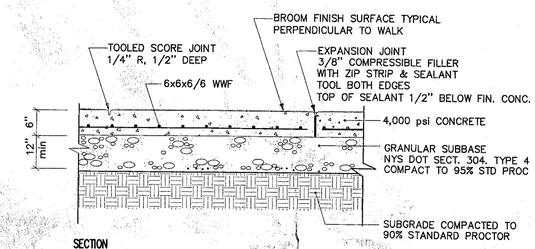


SECTION
CONCRETE PAVEMENT
NOT TO SCALE

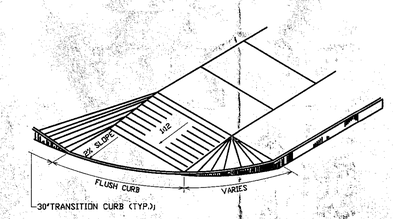


SIDEWALK CURB RAMP

HANDICAP RAMP DETAILS
N.T.S

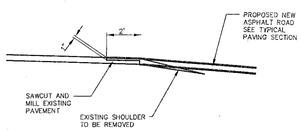


PAVEMENT KEY DETAIL
N.T.S.

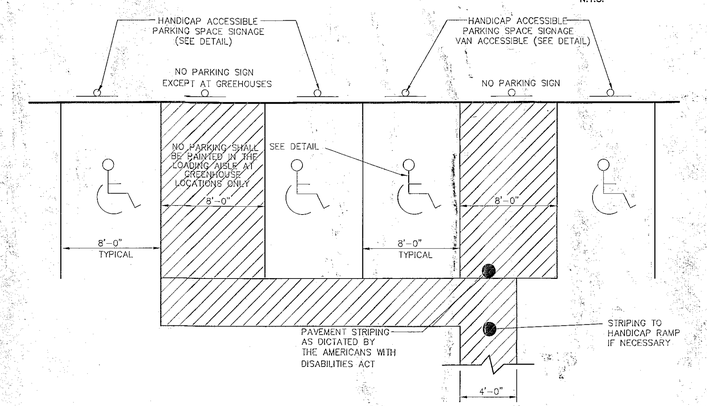


TYPICAL HANDICAP PARKING LAYOUT
(NOT TO SCALE)

TOWN OF BETHLEHEM, NEW YORK
PLANNING DEPT. ORIGINAL
- SCANNED -
0 1 INCHES 2

PLANNING BOARD
TOWN OF BETHLEHEM
ALBANY COUNTY, NEW YORK
By direction of the Chairman.
These drawings are hereby approved.
See sheet(s) 1, 2, 3, 4, 5
for date and signature.

TOWN OF BETHLEHEM APPROVAL

| NO. | DATE | REVISIONS | BY: |
|---|---|---|---|
| 2 | 10-1-14 | REVISED AS PER TOWN ENGINEERING COMMENTS | |
| 1 | 8-6-14 | REVISED AS PER TOWN AND TOE COMMENTS | |

Scaling off these drawings shall be done only for review and approval purposes. Contractor's shall use dimensions and electronic data only for layout and construction.

Unauthorized alterations or additions to this document is a violation of Sec. 7209 Sub. 2 of the N.Y.S. Education Law.
Copyright 2014 Brett L. Steenburgh, P.E. PLLC
All right reserved. No use or reproduction of this material is permitted without the express written consent of Brett L. Steenburgh, P.E., PLLC

BRETT L. STEENBURGH, P.E. PLLC
2832 ROSENDALE ROAD
NISKAYUNA, NY 12309
PHONE - (518) 385-0675
FAX - (518) 280-6520
bsteenbu@nycap.rr.com
CIVIL ENVIRONMENTAL STRUCTURAL ENGINEERING

# MISC. DETAILS

BEVERWYCK ILU ADDITION
TOWN OF BETHLEHEM
COUNTY OF ALBANY STATE OF NEW YORK

DRAWN BY: BLS
CADD FILE: DF-RECOVER
CHECKED BY: BLS
JOB NO. BEVERWYCK PHASE VI
SCALE: 1" = 20'
DATE: MAY 12, 2014
SHEET 15 OF 18