Planning Approval
10-01000019_SPA121

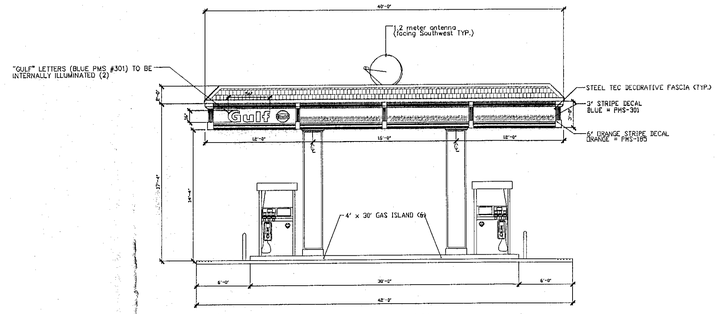

SOUTH ELEVATION

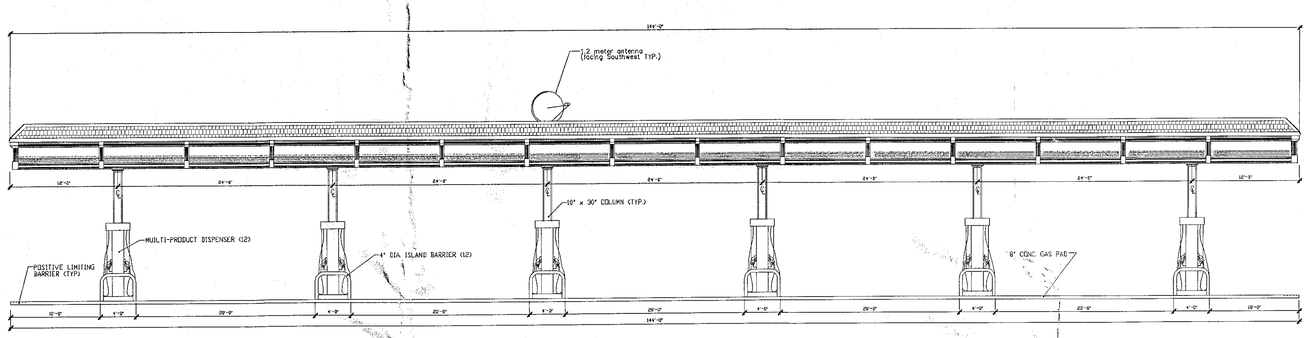

WEST ELEVATION
SCALE: 1/8"=1'-0"

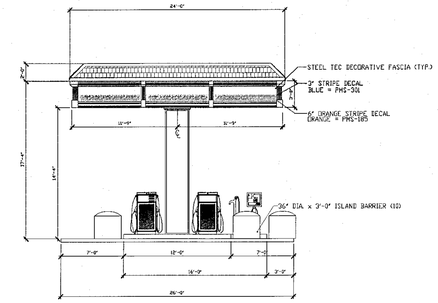

SOUTH ELEVATION

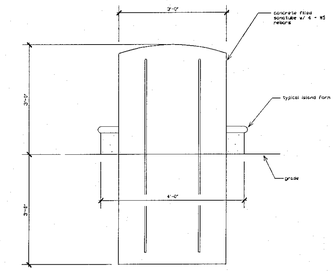

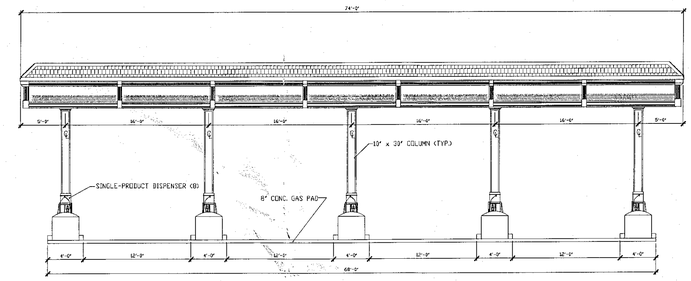

WEST ELEVATION

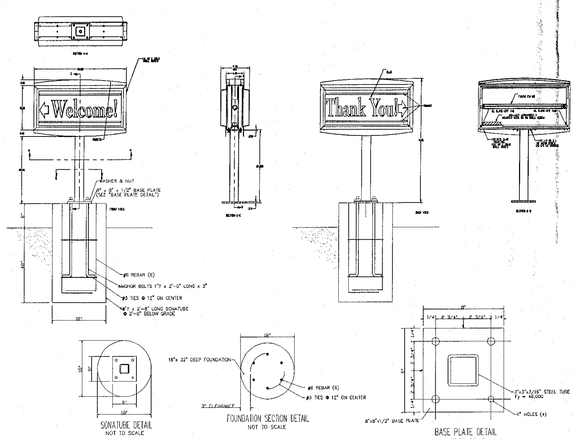

1. AREA OF SIGN - SQUARE: 4 SQ.FT.
2. CABINET: EXTRUDED ALUMINUM
3. LAMPS: 800 MAT DIGITAL 7,200 LUMENS (DIALITE) LUMENS PER SQ. FT.
4. ELECTRICAL: ELECTRONIC BALLAST 120V AC 60HRZ, 3A AMP
5. FACE PANEL: PAINTED DUALO 2K PMS 185 POLYURETHANE BEFORE & WITH CUSTOMER APPROVAL GRAPHICS & TEXTURE
6. MATERIAL SPECS: ALUMINUM SHEETS 6063-T5 ALUMINUM SHEETS 3003 H14 STEEL SHAPES ASTM A36 STEEL SHEET ASTM A366 STEEL PLATE ASTM A36
7. INTERIOR - MILL FINISH EXTERIOR - MILL VALUE - POLE & CABINET
8. OVERALL DIMENSIONS OF SIGN: LENGTH - 1'-0" WIDTH - 1'-0" DEPTH - 9 5/8"
9. SIGN WILL BE DEMOVABLE BY REMOVABLE SIDE
10. COLORS: BLUE - PMS 2945 ORANGE - PMS 165

SIGN DETAIL
SCALE: N.T.S.

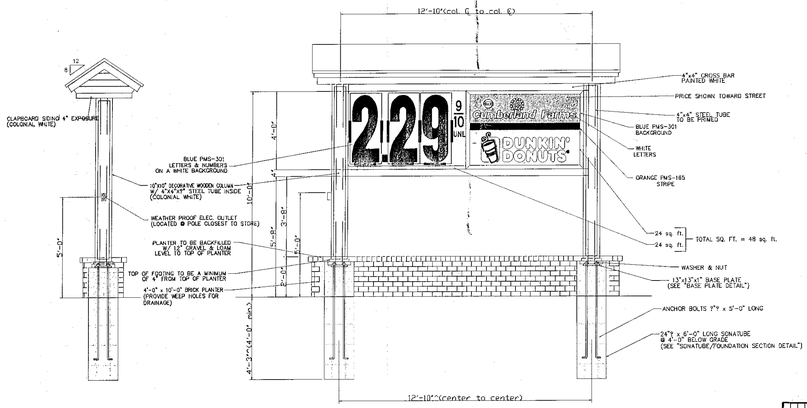

SIDE VIEW
SCALE: N.T.S.

FRONT VIEW
SCALE: N.T.S.

FREESTANDING SIGN DETAIL (TYP OF 2)
SCALE: N.T.S.

PLANNING BOARD
TOWN OF BETHLEHEM
ALBANY COUNTY, NEW YORK

This Site Plan Approved.

Chairman
Title SPA 121 6-6-06

Date 8/29/06

TOWN OF BETHLEHEM APPROVAL AREA

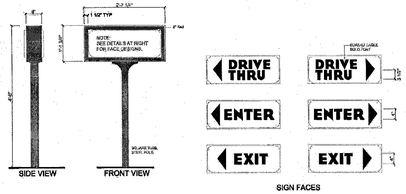

Color & Material Notes:
Faces to be pan formed clear Solar Grade polycarbonate
Background to be white
ENTER, EXIT, DRIVE THRU and Arrows to be Black.
All vinyl to be applied to the second surface.
Cars and Poles : Royal Plum, PMS #2235C, Satin paint finish
(SW 6293 "Fabulous Grape" recommended)

AREA OF SIGN: 2.66 SQ.FT.
LOCATION: 1 x FACE TO CARS TO

DRIVE THRU SIGN DETAIL
SCALE: N.T.S.

RECEIVED
AUG 28 2006
TOWN OF BETHLEHEM

THIS PLAN HAS BEEN TAKEN FROM PLANS PROVIDED BY CUMBERLAND FARMS, INC. AND IS NOT INTENDED FOR CONSTRUCTION PURPOSES.

Cumberland Farms
777 Dedham Street Canton, Massachusetts 02021

Rev.	Date	Comment	BY
4	3/10/06	REVISED PER TOWN COMMENTS	A.S.
3	11/22/05	REVISED PER TSM COMMENTS	R.S.
2	9/14/05	REVISED PER CLIENT COMMENTS	R.S.
1	5/6/05	REVISED PER CLIENT COMMENTS	R.S.

BOHLER ENGINEERING, P.C.
• CIVIL & CONSULTING ENGINEERS • PROJECT MANAGERS • ENVIRONMENTAL & SITE PLANNERS • MUNICIPAL ENGINEERS •

352 TURNPIKE ROAD, SUITE 105
SOUTHBOROUGH, MA 01772
(508) 480-9900

5 COMPUTER DRIVE WEST, SUITE 203
ALBANY, NEW YORK 12205
(518) 438-9900

776 MOUNTAIN BLVD.
WATCHUNG, NEW JERSEY 07060
(908) 668-8300

PROJECT: CUMBERLAND FARMS, INC.
PROP. FOOD STORE & GAS STATION
68 ROUTE 9W - NYS RTE 9W & NYS RTE 32
TOWN OF BETHLEHEM, ALBANY COUNTY, NEW YORK

TITLE: CANOPY & SIGNAGE DETAILS

L.H. BOHLER
PROFESSIONAL ENGINEER
NEW JERSEY LICENSE No. 27410
PENNSYLVANIA LICENSE No. 37184
NEW YORK LICENSE No. 63409
CONNECTICUT LICENSE No. 17518
MASSACHUSETTS LICENSE No. 37025

W. D. [illegible]
PROFESSIONAL ENGINEER
NEW JERSEY LICENSE No. [illegible]
PENNSYLVANIA LICENSE No. [illegible]
NEW YORK LICENSE No. [illegible]

SCALE: (H) 1/8"=1'-0" (V) NONE
DATE: 4/11/05
SHEET No: 10 OF 16
DRAWN BY: SMV
PROJECT No: b040587
CHECKED BY: RJS
CAD I.D. #: b040587ss0
REV. No. 4
CONSTRUCTION CHECK DATE