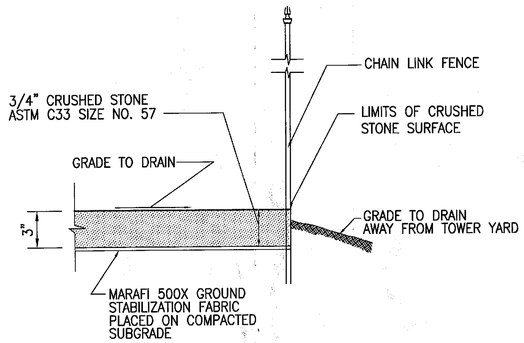

1 — SECTION THROUGH COMPOUND
NOT TO SCALE

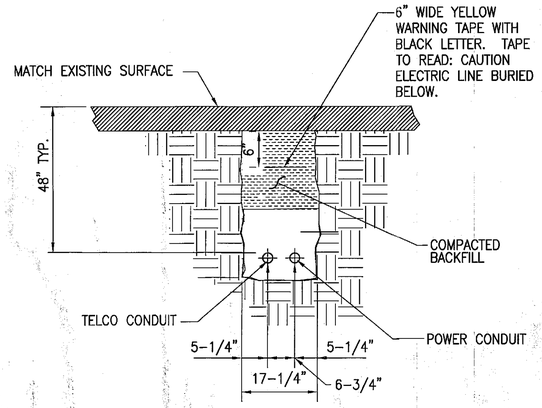

NOTE:
1. NUMBER AND SIZE OF CONDUITS MAY VARY. REFER TO CONSTRUCTION DRAWINGS FOR CONDUIT SIZE AND LOCATION. CONFIRM DIMENSIONS SHOWN WITH UTILITY COMPANY.
2. CONTRACTOR TO VERIFY IN FIELD THE LOCATION, SIZE, TYPE, AND DEPTH OF ALL EXISTING UNDERGROUND UTILITIES PRIOR TO DIGGING THE SERVICE TRENCH. PROVIDE A MINIMUM OF 18" CLEARANCE BETWEEN PROPOSED UTILITIES AND EXISTING UTILITIES IN THE CASE OF UTILITY LINE CROSSINGS.

2 — TYPICAL CONDUIT TRENCH DETAIL
NOT TO SCALE

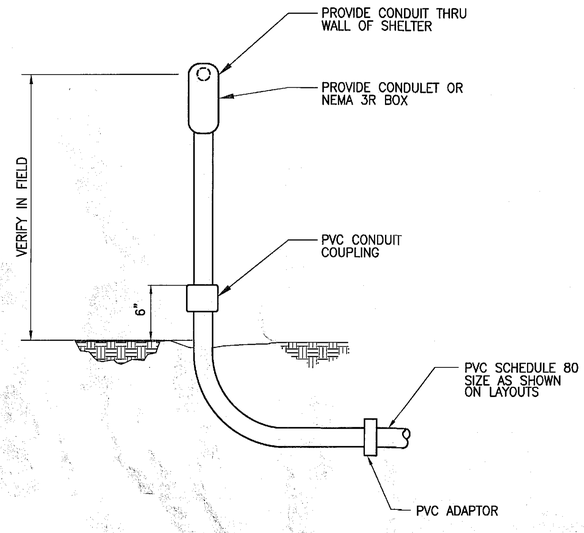

NOTE:
ALL CONDUIT ABOVE GRADE MUST BE RIGID STEEL.
ALL PVC SCH. 80 CONDUIT MUST HAVE MIN. BURIAL DEPTH.

3 — UNDERGROUND CONDUIT STUB-UP (TELCO/POWER)
NOT TO SCALE

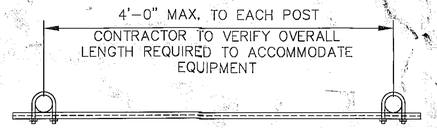

PLAN VIEW

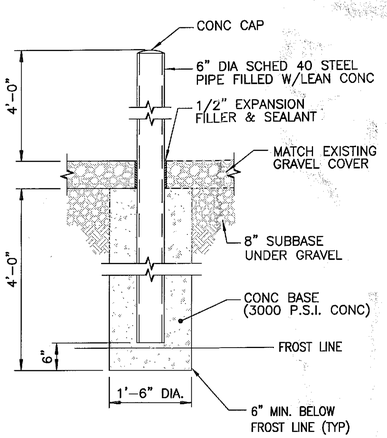

4 — BOLLARD DETAIL
NOT TO SCALE

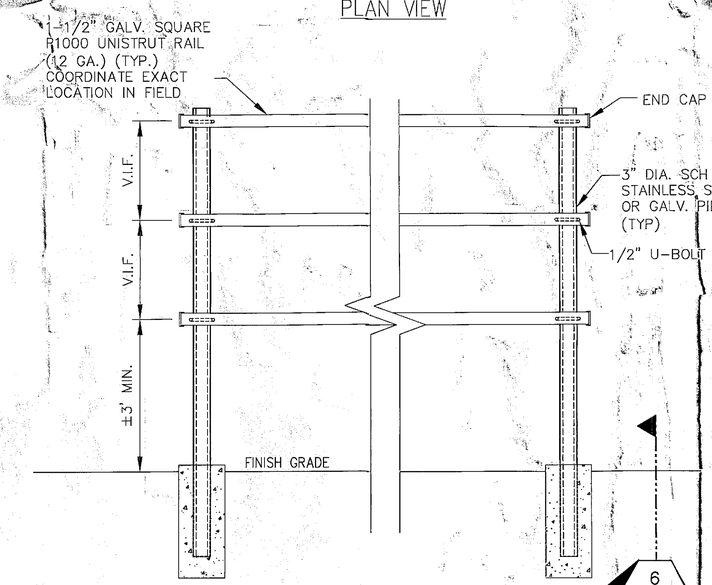

ELEVATION

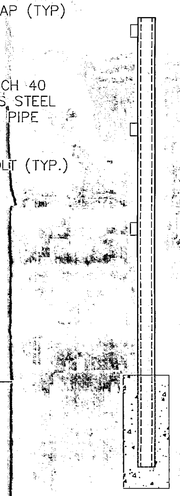

END VIEW

5 — H-FRAME FABRICATION DETAIL
NOT TO SCALE

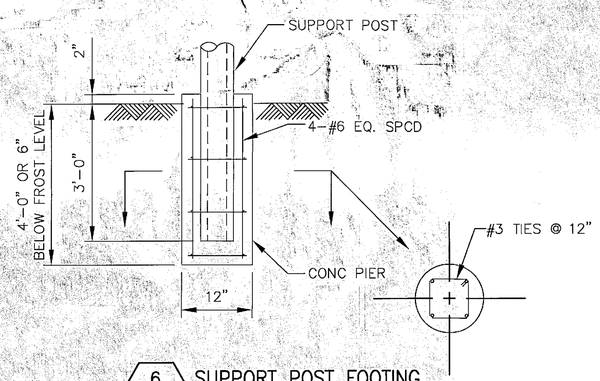

6 — SUPPORT POST FOOTING
NOT TO SCALE

TOWN OF BETHLEHEM, NEW YORK
PLANNING DEPT. ORIGINAL
- SCANNED -
0 1 INCHES 2

PLANNING BOARD
TOWN OF BETHLEHEM
ALBANY COUNTY, NEW YORK
By direction of the Chairman.
These drawings are hereby approved.
See sheet(s) 3 of 27
for date and signature.

INFINIGY Design. Build. Deliver.
1033 Watervliet Shaker Rd
Albany, NY 12205
Office # (518) 880-0790
Fax # (518) 880-0793

STATE OF NEW YORK · JOHN S. STEVENS · 071096 · LICENSED PROFESSIONAL ENGINEER

No.	Submittal / Revision	App'd	Date
1	REVISED PER COMMENTS	SKB	6/30/15
0	ISSUED FOR BP	SKB	4/22/15

Drawn: SKB Date: 4/22/15
Designed: AJD Date: 4/22/15
Checked: AJD Date: 4/22/15

Project Number 168-117

Project Title
CELL TOWER
457 NYS ROUTE 85
SLINGERLANDS, NY 12159

Prepared For
Phoenix Towers LLC
110 WASHINGTON AVE
NORTH HAVEN, CT 06473
C: 203-623-3287

Drawing Title
DETAILS

Drawing Scale:
Date: 6/30/15
CD

UNAUTHORIZED ALTERATION OR ADDITION TO THIS DOCUMENT IS A VIOLATION OF APPLICABLE STATE AND/OR LOCAL LAWS

Sheet Number:
8 OF 27