PIPE OUTLET SEDIMENT TRAPS

	WESTERN TRAP	EASTERN TRAP
1. TOP ELEVATION	197.0	202.0
2. RISER DIAMETER	12"	12"
3. PRINCIPAL SPILLWAY BARRELL DIAMETER	12"	12"
4. INVERT ELEVATION	195.5	200.5
5. OUTLET ELEVATION	195.0	198.0
6. DRAINAGE AREA	0.80 AC	0.36 AC
7. STORAGE REQ'D	2880 CF	3240 CF
8. STORAGE PROVIDED	3200 CF	3600 CF
9. DEPTH	1.5 FT	1.5 FT

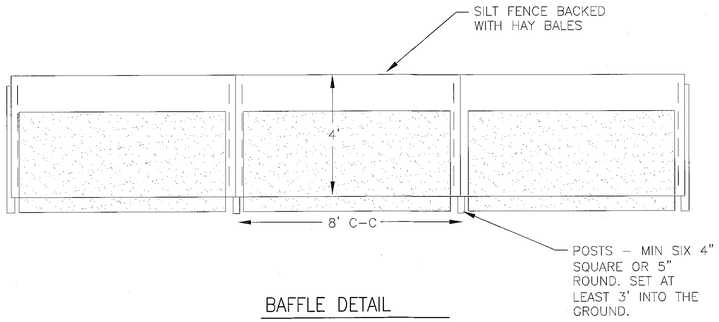

BAFFLE DETAIL

NOT TO SCALE

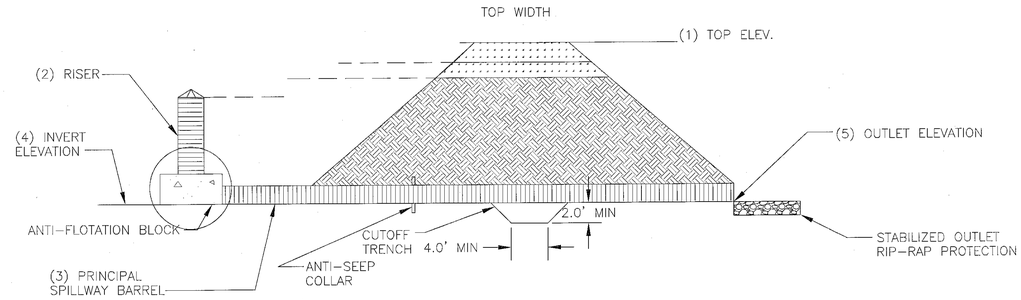

TEMPORARY SEDIMENT TRAP PROFILE

NOT TO SCALE

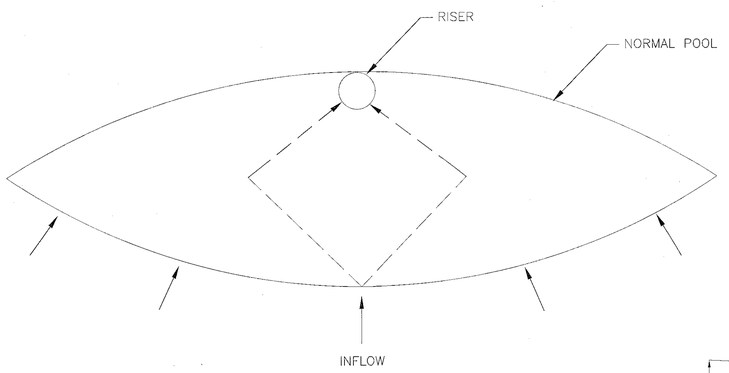

TEMPORARY SEDIMENT TRAP

NOT TO SCALE

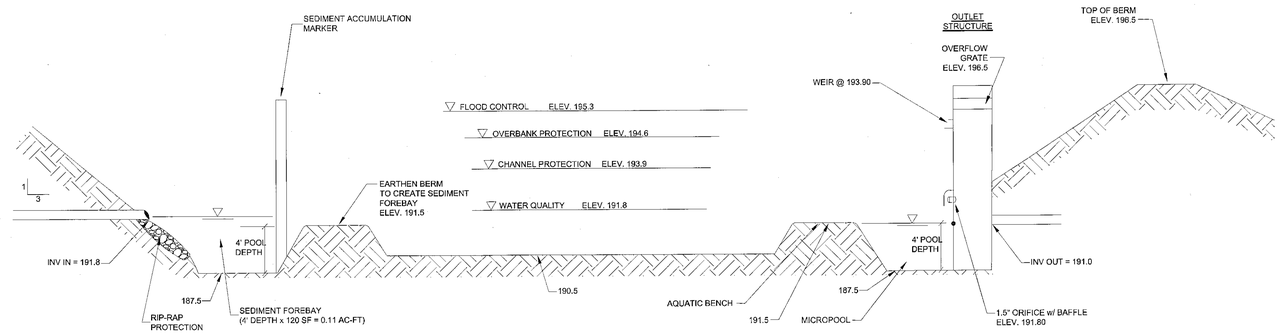

SECTION OF MICROPOOL EXTENDED DETENTION POND

NOT TO SCALE

(SEE DETAILS BELOW FOR SAFETY BENCH CONFIGURATION)

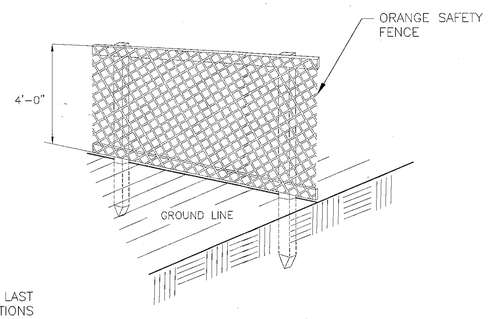

CONSTRUCTION FENCE DETAIL

NOT TO SCALE

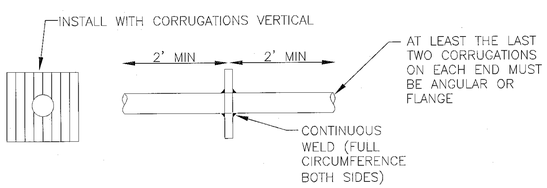

TYPICAL ANTI-SEEP COLLAR WELDED IN PLACE ON BARREL SECTION

NOT TO SCALE

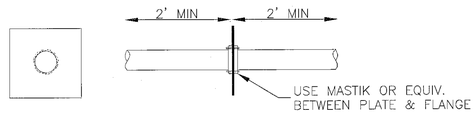

TYPICAL ANTI-SEEP COLLAR FOR FLANGE JOINT PIPE

NOT TO SCALE

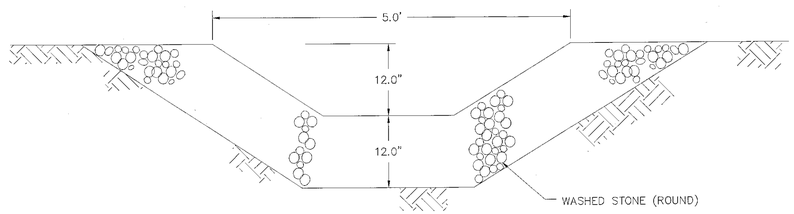

STONE-LINED PILOT CHANNEL DETAIL

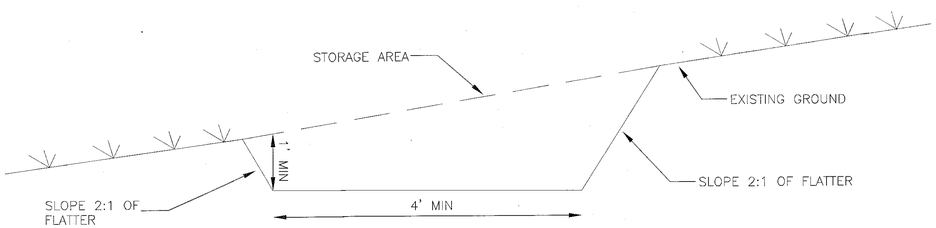

TEMPORARY DIVERSION SWALE PROFILE

NOT TO SCALE

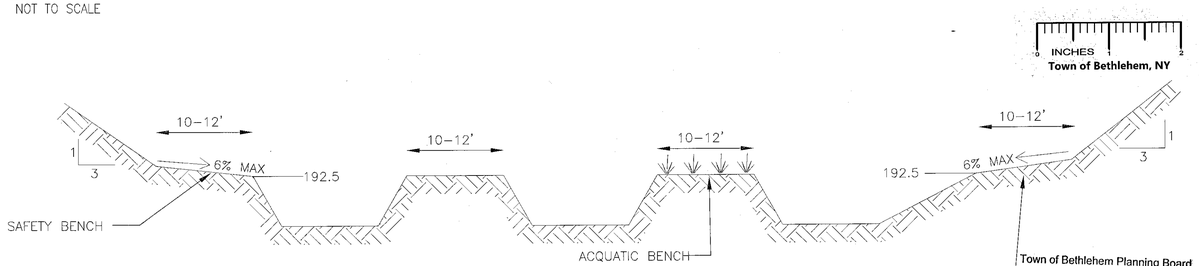

ALBANY COUNTY DEPARTMENT OF HEALTH
DIVISION OF ENVIRONMENTAL HEALTH SERVICES

By direction of the Commissioner of Health, these plans are hereby approved. See first sheet for date and signature.

Town of Bethlehem Planning Board
By direction of the Chairman these plans are hereby Approved. See first sheet for date & signature.

SAFETY BENCH SECTION

NOT TO SCALE

NO.	REVISION	DATE	BY
8	Final Submission	11/07/11	MBT
7	Town Rev. Comments	06/02/11	MBT
6	Town Rev. Comments	03/08/11	MBT
5	Town Rev. Comments	01/21/11	MBT
4	Town Rev. Comments	12/01/10	MBT
3	Town Rev. Comments	09/30/10	MBT
2	Town Rev. Comments	05/14/10	MBT
1	Town Comments	02/10/09	MBT

FINAL SUBDIVISION PLANS

RICHARD BOHL
P.O. BOX 7
GLENMONT, NEW YORK 12077

UNAUTHORIZED ALTERATION OR ADDITION TO THIS DOCUMENT IS A VIOLATION OF APPLICABLE STATE PROFESSIONAL LAWS

STATE OF NEW YORK ★ MICHAEL B. TROTTER ★ 072155 ★ LICENSED PROFESSIONAL ENGINEER

Drawing Copyright © 2011 Creighton Manning Engineering, LLP

Creighton Manning
CREIGHTON MANNING ENGINEERING, LLP
2 WINNERS CIRCLE • ALBANY • NEW YORK • 12205
P: (518) 446-0396 F: (518) 446-0397 WWW.CMEILLP.COM

DESIGNED: M.B.T. | DRAWN BY: T.A.R. | CHECKED: M.B.T.

THE PINES AT NORMANSIDE
LEONARD PLACE
TOWN OF BETHLEHEM, NEW YORK

SOIL & EROSION CONTROL DETAILS II

DATE: 11-07-2011 | CME No.: 08-000 | SCALE: AS NOTED

C 13

SHEET NUMBER 13 of 13

Last Saved by: Ted Ranalow
Plot Date: April 15, 2012 4:35 PM
File Name: F:\Civil\Bohl Delmar\ACAD\10-LOT-SUBD\SheetSet\08\2010\DETAILS II.dwg