SPECIAL NOTE

SHOULD ANYTHING BE OMITTED FROM THE PLANS AND SPECIFICATIONS WHICH IS NECESSARY TO A COMPLETE UNDERSTANDING OF THE WORK, OR SHOULD ANY DISCREPANCY EXISTS EITHER IN THE VARIOUS INSTRUMENTS FURNISHED OR IN THE WORK OF OTHER CONTRACTORS AFFECTING THE WORK COVERED HEREBY, THE CONTRACTOR SHALL AND WILL IMMEDIATELY NOTIFY THE ENGINEER, AND IN THE EVENT OF THE CONTRACTOR'S FAILURE TO DO SO, HE SHALL AND WILL MAKE GOOD ANY DAMAGE OR DEFECT IN HIS WORK CAUSED THEREBY.

GENERAL NOTES

(1) TOPOGRAPHIC SURVEY AND EXISTING UTILITIES, AS SHOWN, BY PAUL E. HITE, L.L.S..

(2) ALL GRADES SET IN FIELD SHALL BE COMPLETED BY A LICENSED LAND SURVEYOR.

(3) CONTRACTOR TO VERIFY LOCATION OF ALL UNDERGROUND UTILITIES PRIOR TO THE COMMENCEMENT OF CONSTRUCTION. ANY UNDERGROUND UTILITIES AS SHOWN IN THEIR RELATIVE POSITIONS ARE FOR INFORMATION ONLY. THEIR EXACT LOCATION SHALL BE CHECKED AT THE SITE BEFORE CONSTRUCTION BEGINS.

(4) FOR DETAILED UTILITY INFORMATION REFER TO "DRAINAGE PLAN" (SHEET NO.2 OF 3.) AND "PROFILES, SECTIONS AND DETAILS" (SHEET NO.3 OF 3.) AS PREPARED BY EDWARD J. KEEGAN ASSOCIATES, P.C., PROFESSIONAL ENGINEERS AND PLANNERS, 600 BROADWAY, ALBANY, NEW YORK AND FILED IN THE COMMISSIONER OF PUBLIC WORKS OFFICE, TOWN OF BETHLEHEM, DELMAR, N.Y.

(5) SEWER MAIN SHALL BE 8" Ø A.B.S. (ARMCO TRUSS PIPE) AND SHALL BE CONSTRUCTED AT A MINIMUM SLOPE OF 0.004. SANITARY SEWER FACILITIES SHALL MEET THE REQUIREMENTS OF THE TOWN OF BETHLEHEM SEWER DISTRICT.

(6) SANITARY SEWER LATERALS SHALL BE 6" Ø A.B.S. (S.D.R. 23.5, EXTRA HEAVY WALL).

(7) WATER MAINS SHALL BE 8" Ø DUCTILE IRON, CLASS 52, AND CEMENT LINED - DOUBLE THICKNESS. MAINS SHALL BE TESTED FOR PRESSURE, LEAKAGE AND STERILIZED IN ACCORDANCE WITH N.Y.S.D.E.C. AND A.W.W.A. REQUIREMENTS.

(8) WATER LATERALS SHALL BE A MINIMUM OF 3/4" Ø TYPE "K" COPPER. ALL LATERALS SHALL BE WET TAPPED.

(9) A MINIMUM OF 1'-6" VERTICAL SEPARATION BETWEEN THE INVERT OF THE WATER LINE AND CROWN OF THE SANITARY SEWER LINE SHALL BE MAINTAINED AT ALL CROSSINGS. A MINIMUM HORIZONTAL SEPERATION OF 10'-0" SHALL BE MAINTAINED.

(10) AT STORM SEWER AND WATER LINE CROSSINGS A MINIMUM CLEARANCE OF 1'-6" SHALL BE MAINTAINED WHETHER OVER OR UNDER.

(11) NO FOOTING, ROOF OR CELLAR DRAINS SHALL BE CONNECTED TO SANITARY SEWER FACILITIES.

(12) ALL FOOTING DRAIN DISCHARGES SHALL BE PRESSURE TYPE.

(13) CONTOUR INTERVAL SHOWN TWO (2.00') FOOT.

LEGEND

X0.00	DENOTES EXISTING GRADE ELEVATION
X0.00	DENOTES PROPOSED FINISHED GRADE ELEVATION
	DENOTES EXISTING MANHOLES
	DENOTES PROPOSED SANITARY MANHOLES
	DENOTES PROPOSED INLET STRUCTURES
	DENOTES PROPOSED WATER MAIN (8" Ø D.I.P.)
	DENOTES PROPOSED STORM SEWER
	DENOTES PROPOSED SANITARY SEWER
	DENOTES PROPERTY LINE (PERIMETER)
	DENOTES PARCEL LOT LINE (INTERIOR)
	DENOTES EXISTING GRADE CONTOURS
	DENOTES PROPOSED FINISHED GRADE CONTOURS
	DENOTES PROPOSED SEEPAGE PIT WITH INLET COVER
	DENOTES PROPOSED STORM SEWER MANHOLES
	DENOTES PROPOSED STORM SEWER END SECTIONS
	DENOTES PROPOSED WATER VALVES
	DENOTES PROPOSED HYDRANT & D.G.V. WITH BOX
	DENOTES RADIAL LINES
	DENOTES EXISTING MARSH
	DENOTES EXISTING SWALE

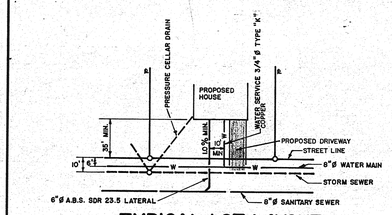

TYPICAL LOT LAYOUT

NOT TO SCALE

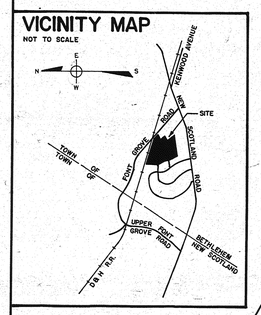

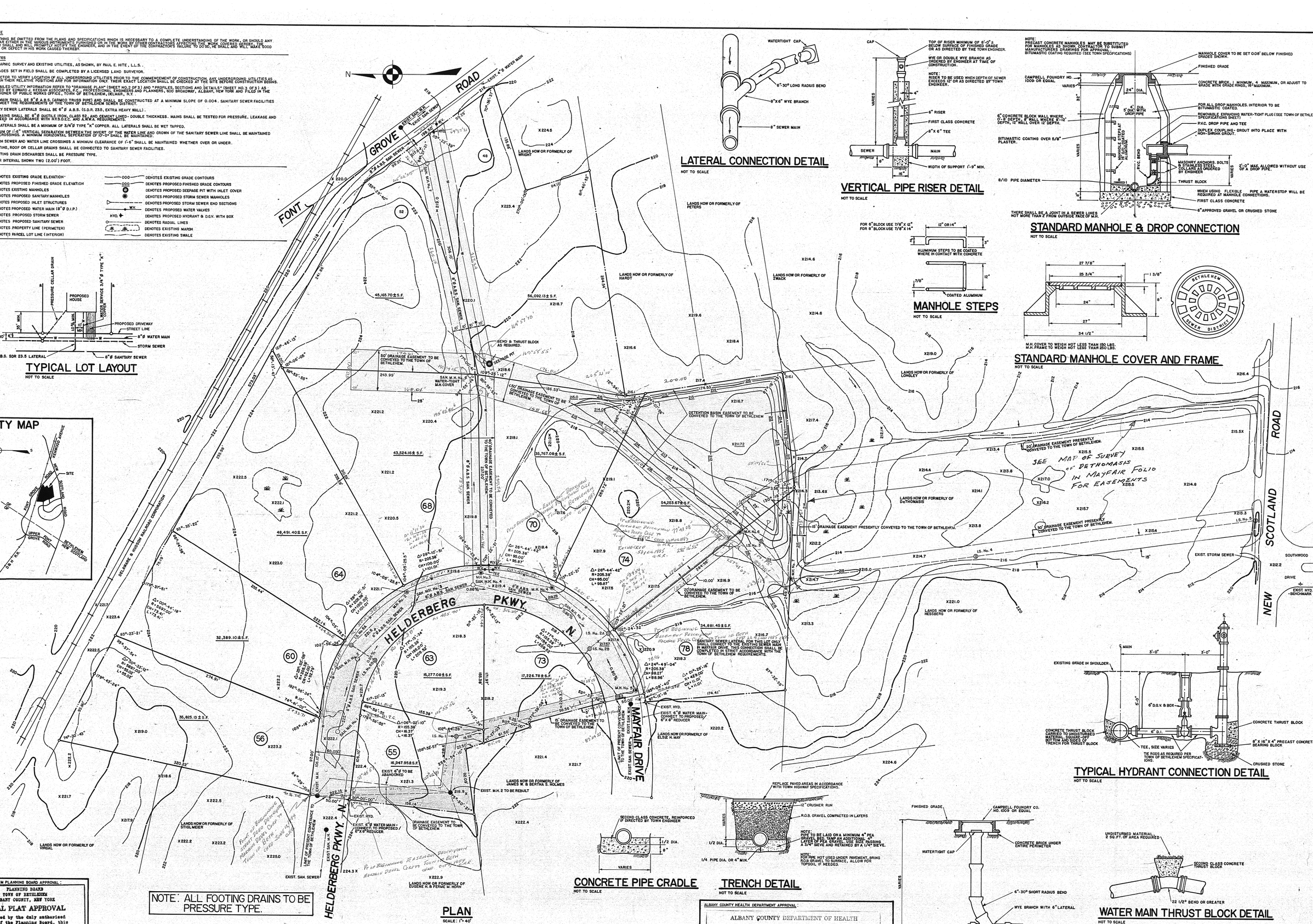

NOTE: ALL FOOTING DRAINS TO BE PRESSURE TYPE.

PLAN

SCALE: 1" = 40'

NOTE: ALL EASEMENTS SHOWN SHALL BE CONVEYED TO THE TOWN OF BETHLEHEM.

BENCHMARK: NUT POINT OF ARROW HYDRANT LOCATED ON THE WEST SIDE OF SOUTHWOOD DRIVE AT THE INTERSECTION WITH NEW SCOTLAND ROAD. ELEVATION 214.89.

LATERAL CONNECTION DETAIL

NOT TO SCALE

VERTICAL PIPE RISER DETAIL

NOT TO SCALE

STANDARD MANHOLE & DROP CONNECTION

NOT TO SCALE

MANHOLE STEPS

NOT TO SCALE

STANDARD MANHOLE COVER AND FRAME

NOT TO SCALE

TYPICAL HYDRANT CONNECTION DETAIL

NOT TO SCALE

CONCRETE PIPE CRADLE

NOT TO SCALE

TRENCH DETAIL

NOT TO SCALE

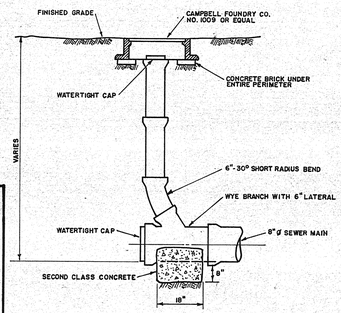

LAMPHOLE DETAIL

NOT TO SCALE

WATER MAIN THRUST BLOCK DETAIL

NOT TO SCALE

TOWN OF BETHLEHEM PLANNING BOARD APPROVAL:

PLANNING BOARD
TOWN OF BETHLEHEM
ALBANY COUNTY, NEW YORK

FINAL PLAT APPROVAL

When signed by the duly authorized officer of the Planning Board, this endorsement constitutes final approval of this Plat.

Signed: [signature]
CHAIRMAN
Title:
Date: MAY 18 1984

See also Certificate of Approval of Final Plat No. 48-F

ALBANY COUNTY HEALTH DEPARTMENT APPROVAL:

ALBANY COUNTY DEPARTMENT OF HEALTH

This is to certify that the proposed arrangements for water supply and sewerage for ...Havenwood... realty development in the ...Town of Bethlehem... are approved subject to the conditions listed in letter of this date, and in accordance with Article X of the Albany County Sanitary Code. Consent is hereby given for the filing of this map in the Office of the Albany County Clerk.

Date MAY 09 1984 ..... Commissioner of Health

Stephen S. Lehrer, P.E. ..... Dir. Div. Environmental Health Services

MAP OF
"HAVENWOOD"
PROPERTY OF
MARTHON DEVELOPMENT CORPORATION
TOWN OF BETHLEHEM ALBANY COUNTY NEW YORK

PREPARED BY:
PAUL E. HITE
LICENSED LAND SURVEYOR
DELMAR, NEW YORK

NO.	REVISION	DATE	BY
1	PER TOWN ENGINEER'S REQUIREMENTS	02-21-84	MWM
2	STREET NAME & LOT NUMBERS ADDED	03-21-84	MWM

PLAN
SECTIONS &
DETAILS

DATE:	JANUARY 10, 1984
SCALE:	AS SHOWN
DESIGN BY:	PAUL E. HITE & THOMAS N. RIZZO
DRAWN BY:	MARK N. MIRANDO
CHECKED BY:	PEH, TNR & EJK

SHEET NO. 1 / 3 SHEETS

UNAUTHORIZED ALTERATION OR ADDITION TO THIS DOCUMENT IS A VIOLATION OF SECTION 7209 SUBDIVISION 2 OF THE NEW YORK STATE EDUCATION LAW.